JVC

VICTOR COMPANY OF JAPAN, LIMITED
VIDEO DIVISION

S40894

JVC

HR-S6850EU,S6851EU,S6852EU,S6855EK

No. 82856

JVC

SERVICE MANUAL

VIDEO CASSETTE RECORDER

HR-S6850EU,S6851EU,S6852EU,S6855EK

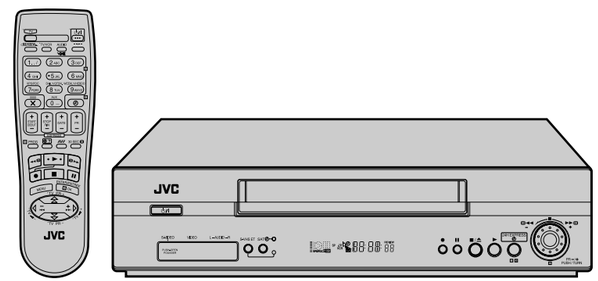

SHOWVIEW® DELUXE
Hi-Fi S-VHS 625
Super VHS ET

SPECIFICATIONS *(The specifications shown pertain specifically to the model HR-S6850EU/S6851EU/6852EU)*

GENERAL

Power requirement	: AC 220 V – 240 V ∿ , 50 Hz/60 Hz
Power consumption	
Power on	: 22 W
Power off	3.8 W
Temperature	
Operating	: 5°C to 40°C
Storage	: –20°C to 60°C
Operating position	: Horizontal only
Dimensions (WxHxD)	: 400 mm x 94 mm x 278 mm
Weight	: 3.6 kg
Format	: S-VHS/VHS PAL standard
Maximum recording time	
(SP)	: 240 min. with E-240 video cassette
(LP)	: 480 min. with E-240 video cassette
(EP)	: 720 min. with E-240 video cassette

VIDEO/AUDIO

Signal system	: PAL-type colour signal and CCIR monochrome signal, 625 lines 50 fields
Recording system	: DA4 (Double Azimuth) head helical scan system
Signal-to-noise ratio	: 45 dB
Horizontal resolution	
(SP/LP)	: 250 lines (VHS) 400 lines (S-VHS)
(EP)	: 220 lines (VHS) 350 lines (S-VHS)
Frequency range	: 70 Hz to 10,000 Hz (Normal audio) 20 Hz to 20,000 Hz (Hi-Fi audio)
Input/Output	: 21-pin SCART connectors: IN/OUT x 1, IN/DECODER x 1 RCA connectors: VIDEO IN x 1, AUDIO IN x 1, AUDIO OUT x 1 S-Video connector: IN x 1

TUNER/TIMER

TV channel storage capacity	: 99 positions (+AUX position)
Tuning system	: Frequency synthesized tuner
Channel coverage	: VHF 47 MHz – 89 MHz/ 104 MHz – 300 MHz/ 302 MHz – 470 MHz UHF 470 MHz – 862 MHz
Aerial output	: UHF channels 22 – 69 (Adjustable)
Memory backup time	: Approx. 10 min.

ACCESSORIES

Provided accessories	: RF cable, Infrared remote control unit, “R6” battery x 2

Specifications shown are for SP mode unless otherwise specified.
E.& O.E. Design and specifications subject to change without notice.

Printed in Japan

This service manual is printed on 100% recycled paper.

COPYRIGHT © 2001 VICTOR COMPANY OF JAPAN, LTD.

No. 82856
May 2001

TABLE OF CONTENTS

Section	Title	Page
Important Safety Precautions		
INSTRUCTIONS		
1.	**DISASSEMBLY**	
1.1	Disassembly flow chart	1-1
1.2	How to read the disassembly and assembly	1-1
1.3	Disassembly/assembly method	1-1
1.4	Service position	1-4
1.4.1	How to set the “Service position”	1-4
1.5	Mechanism service mode	1-4
1.5.1	How to set the “Mechanism service mode”	1-4
1.6	Jig RCU mode	1-4
1.6.1	Setting the Jig RCU mode	1-4
1.6.2	Setting the User RCU mode	1-4
1.7	Servicing items related to video navigation	1-4
1.8	Emergency display function	1-5
1.8.1	Displaying the EMG information	1-5
1.8.2	Clearing the EMG history	1-5
1.8.3	EMG content description	1-6
1.8.4	EMG detail information <1>	1-7
1.8.5	EMG detail information <2>	1-8
2.	**MECHANISM ADJUSTMENT**	
2.1	Before starting repair and adjustment	2-1
2.1.1	Precautions	2-1
2.1.2	Checking for proper mechanical operations	2-1
2.1.3	Manually removing the cassette tape	2-1
2.1.4	Jigs and tools required for adjustment	2-2
2.1.5	Maintenance and inspection	2-3
2.2	Replacement of major parts	2-6
2.2.1	Before starting disassembling (Phase matching between mechanical parts)	2-6
2.2.2	How to set the “Mechanism assembling mode”	2-6
2.2.3	Cassette holder assembly	2-6
2.2.4	Pinch roller arm assembly	2-8
2.2.5	Guide arm assembly and press lever assembly	2-8
2.2.6	A/C head	2-8
2.2.7	Loading motor	2-8
2.2.8	Capstan motor	2-9
2.2.9	Pole base assembly (supply or take-up side)	2-9
2.2.10	Rotary encoder	2-10
2.2.11	Clutch unit	2-10
2.2.12	Change lever assembly, direct gear, clutch gear and coupling gear	2-10
2.2.13	Link lever	2-11
2.2.14	Cassette gear, control cam and worm gear	2-11
2.2.15	Control plate	2-11
2.2.16	Loading arm gear (supply or take-up side) and loading arm gear shaft	2-12
2.2.17	Take-up lever, take-up head and control plate guide	2-13
2.2.18	Capstan brake assembly	2-13
2.2.19	Sub brake assembly (take-up side)	2-13
2.2.20	Main brake assembly (take-up side), reel disk (take-up side) and main brake assembly (supply side)	2-13
2.2.21	Tension brake assembly, reel disk (supply side) and tension arm assembly	2-14
2.2.22	Idler lever, idler arm assembly	2-14
2.2.23	Stator assembly	2-14
2.2.24	Rotor assembly	2-14
2.2.25	Upper drum assembly	2-15
2.3	Compatibility adjustment	2-16
2.3.1	FM waveform linearity	2-16
2.3.2	Height and tilt of the A/C head	2-17
2.3.3	A/C head phase (X-value)	2-17
2.3.4	Standard tracking preset	2-18
2.3.5	Tension pole position	2-18
3.	**ELECTRICAL ADJUSTMENT**	
3.1	Precaution	3-1
3.1.1	Required test equipments	3-1
3.1.2	Required adjustment tools	3-1
3.1.3	Color (colour) bar signal,Color (colour) bar pattern	3-1
3.1.4	Switch settings and standard precautions	3-1
3.1.5	EVR Adjustment	3-1
3.2	Servo circuit	3-2
3.2.1	Switching point	3-2
3.2.2	Slow tracking preset	3-2
3.3	Video circuit	3-2
3.3.1	D/A level	3-2
3.3.2	EE Y/PB Y (S-VHS/VHS) level	3-2
3.3.3	REC color (colour) level	3-3
3.3.4	Video EQ (Frequency response)	3-3
3.3.5	Auto picture initial setting	3-4
3.4	Audio circuit	3-4
3.4.1	Audio REC FM	3-4
3.5	Syscon circuit	3-4
3.5.1	Timer clock	3-4
4.	**CHARTS AND DIAGRAMS**	
	NOTES OF SCHEMATIC DIAGRAM	4-1
	CIRCUIT BOARD NOTES	4-2
4.1	BOARD INTERCONNECTIONS	4-3
4.2	MAIN (VIDEO/AUDIO) SCHEMATIC DIAGRAM	4-5
4.3	MAIN (ON SCREEN) SCHEMATIC DIAGRAM	4-7
4.4	MAIN (SYSCON) SCHEMATIC DIAGRAM	4-9
4.5	MAIN (SW.REG) SCHEMATIC DIAGRAM	4-11
4.6	MAIN (TUNER) SCHEMATIC DIAGRAM	4-13
4.7	MAIN (SW/DISPLAY), S-JACK AND ADV.JOG SCHEMATIC DIAGRAMS	4-15
4.8	MAIN (MAIN TERMINAL) SCHEMATIC DIAGRAM	4-17
4.9	2D DIGITAL SCHEMATIC DIAGRAM	4-19
4.10	TERMINAL (S-SUB) SCHEMATIC DIAGRAM	4-21
4.11	TERMINAL (I/O) SCHEMATIC DIAGRAM	4-23
4.12	DEMODULATOR SCHEMATIC DIAGRAM	4-25
4.13	2D DIGITAL AND DEMODULATOR CIRCUIT BOARDS	4-27
4.14	TERMINAL CIRCUIT BOARD	4-28
4.15	MAIN CIRCUIT BOARD	4-29
4.16	REMOTE CONTROLLER SCHEMATIC DIAGRAM	4-32
4.17	FDP GRID ASSIGNMENT AND ANODE CONNECTION	4-33
4.18	WAVEFORMS	4-34
4.19	VOLTAGE CHARTS	4-36
4.20	CPU PIN FUNCTION	4-37
4.21	SYSTEM CONTROL BLOCK DIAGRAM	4-39
4.22	VIDEO BLOCK DIAGRAM	4-41
4.23	AUDIO BLOCK DIAGRAM	4-45
5.	**PARTS LIST**	
5.1	PACKING AND ACCESSORY ASSEMBLY <M1>	5-1
5.2	FINAL ASSEMBLY <M2>	5-2
5.3	MECHANISM ASSEMBLY <M4>	5-4
5.4	ELECTRICAL PARTS LIST	5-6
	MAIN BOARD ASSEMBLY <03>	5-6
	2D DIGITAL BOARD ASSEMBLY <05>	5-13
	TERMINAL BOARD ASSEMBLY <06>	5-14
	A/C HEAD BOARD ASSEMBLY <12>	5-16
	DEMOD BOARD ASSEMBLY <14>	5-16
	S.JACK BOARD ASSEMBLY <36>	5-16
	ADV.JOG BOARD ASSEMBLY <38>	5-16
	LOADING MOTOR BOARD ASSEMBLY <55>	5-16

The following table lists the differing points between Models (HR-S6850EU, HR-S6851EU, HR-S6852EU and HR-S6855EK) in this series.

	HR-S6850EU	HR-S6851EU	HR-S6852EU	HR-S6855EK
VIDEO SYSTEM	PAL/MESECAM(MANUAL) /NTSC ON PAL TV	PAL/MESECAM(MANUAL) /NTSC ON PAL TV	PAL/MESECAM(MANUAL) /NTSC ON PAL TV	PAL/NTSC ON PAL TV
BROADCASTING STANDARD	B/G,D/K	B/G,D/K	B/G,D/K	I
STEREO DECODER	NICAM/A2	NICAM/A2	NICAM/A2	NICAM
RF OUT SYSTEM [INITIAL]	G,K	G,K	G,K	I
VCR PLUS+	SHOWVIEW DELUXE	SHOWVIEW DELUXE	SHOWVIEW DELUXE	VIDEOPLUS+ DELUXE
VPS(AUTO)	USED	USED	USED	NOT USED
INITIAL (TIMER)	GER,AUS,SWISS:ON, OTHER:OFF	GER,AUS,SWISS:ON, OTHER:OFF	GER,AUS,SWISS:ON, OTHER:OFF	OFF
CABLE BOX OR DBS. BOX OR SAT CTL	READY	READY	READY	USED
LANGUAGE [INITIAL] (ON SCREEN DISPLAY)	13 LANG. [E]	13 LANG. [E]	13 LANG. [E]	ENG
GOST	USED	NOT USED	NOT USED	NOT USED
FRONT PANEL COLOR	PURE SILVER	PURE SILVER	BLACK	PURE SILVER
WINDOW COLOR	SMOKE LIGHT GRAY	GREEN	SMOKE PINK	CLEAR
CABLE MOUSE	OPTION	OPTION	OPTION	PROVIDED

Important Safety Precautions

Prior to shipment from the factory, JVC products are strictly inspected to conform with the recognized product safety and electrical codes of the countries in which they are to be sold. However, in order to maintain such compliance, it is equally important to implement the following precautions when a set is being serviced.

● Precautions during Servicing

1. Locations requiring special caution are denoted by labels and inscriptions on the cabinet, chassis and certain parts of the product. When performing service, be sure to read and comply with these and other cautionary notices appearing in the operation and service manuals.

2. Parts identified by the ⚠ symbol and shaded ( ) parts are critical for safety.
   Replace only with specified part numbers.
   Note: Parts in this category also include those specified to comply with X-ray emission standards for products using cathode ray tubes and those specified for compliance with various regulations regarding spurious radiation emission.

3. Fuse replacement caution notice.
   Caution for continued protection against fire hazard.
   Replace only with same type and rated fuse(s) as specified.

4. Use specified internal wiring. Note especially:
   1) Wires covered with PVC tubing
   2) Double insulated wires
   3) High voltage leads

5. Use specified insulating materials for hazardous live parts. Note especially:
   1) Insulation Tape 3) Spacers 5) Barrier
   2) PVC tubing 4) Insulation sheets for transistors

6. When replacing AC primary side components (transformers, power cords, noise blocking capacitors, etc.) wrap ends of wires securely about the terminals before soldering.

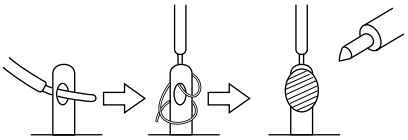

Fig.1

7. Observe that wires do not contact heat producing parts (heatsinks, oxide metal film resistors, fusible resistors, etc.)

8. Check that replaced wires do not contact sharp edged or pointed parts.

9. When a power cord has been replaced, check that 10-15 kg of force in any direction will not loosen it.

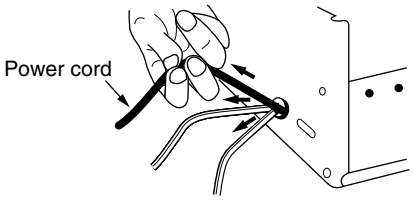

Fig.2

10. Also check areas surrounding repaired locations.

11. Products using cathode ray tubes (CRTs)
    In regard to such products, the cathode ray tubes themselves, the high voltage circuits, and related circuits are specified for compliance with recognized codes pertaining to X-ray emission.
    Consequently, when servicing these products, replace the cathode ray tubes and other parts with only the specified parts. Under no circumstances attempt to modify these circuits.
    Unauthorized modification can increase the high voltage value and cause X-ray emission from the cathode ray tube.

12. Crimp type wire connector
    In such cases as when replacing the power transformer in sets where the connections between the power cord and power transformer primary lead wires are performed using crimp type connectors, if replacing the connectors is unavoidable, in order to prevent safety hazards, perform carefully and precisely according to the following steps.

    1) Connector part number : E03830-001
    2) Required tool : Connector crimping tool of the proper type which will not damage insulated parts.
    3) Replacement procedure
    (1) Remove the old connector by cutting the wires at a point close to the connector.
    Important : Do not reuse a connector (discard it).

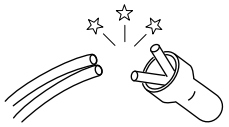

Fig.3

(2) Strip about 15 mm of the insulation from the ends of the wires. If the wires are stranded, twist the strands to avoid frayed conductors.

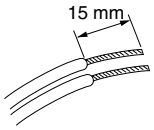

Fig.4

(3) Align the lengths of the wires to be connected. Insert the wires fully into the connector.

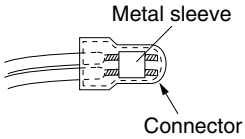

Fig.5

(4) As shown in Fig.6, use the crimping tool to crimp the metal sleeve at the center position. Be sure to crimp fully to the complete closure of the tool.

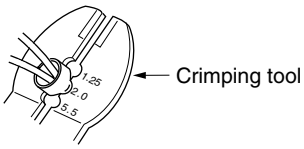

Fig.6

(5) Check the four points noted in Fig.7.

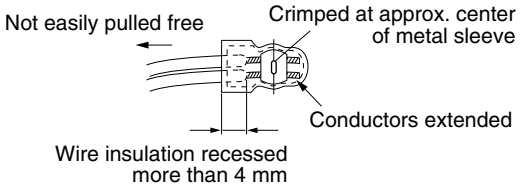

Fig.7

● Safety Check after Servicing

Examine the area surrounding the repaired location for damage or deterioration. Observe that screws, parts and wires have been returned to original positions, Afterwards, perform the following tests and confirm the specified values in order to verify compliance with safety standards.

1. Insulation resistance test

Confirm the specified insulation resistance or greater between power cord plug prongs and externally exposed parts of the set (RF terminals, antenna terminals, video and audio input and output terminals, microphone jacks, earphone jacks, etc.). See table 1 below.

2. Dielectric strength test

Confirm specified dielectric strength or greater between power cord plug prongs and exposed accessible parts of the set (RF terminals, antenna terminals, video and audio input and output terminals, microphone jacks, earphone jacks, etc.). See table 1 below.

3. Clearance distance

When replacing primary circuit components, confirm specified clearance distance (d), (d') between soldered terminals, and between terminals and surrounding metallic parts. See table 1 below.

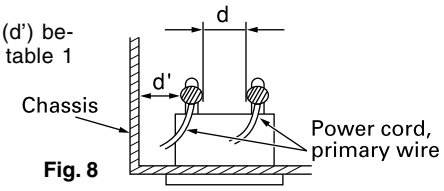

Fig. 8

4. Leakage current test

Confirm specified or lower leakage current between earth ground/power cord plug prongs and externally exposed accessible parts (RF terminals, antenna terminals, video and audio input and output terminals, microphone jacks, earphone jacks, etc.).

Measuring Method : (Power ON)

Insert load Z between earth ground/power cord plug prongs and externally exposed accessible parts. Use an AC voltmeter to measure across both terminals of load Z. See figure 9 and following table 2.

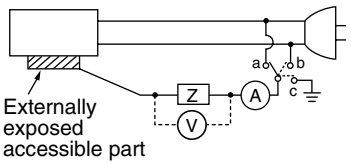

Fig. 9

5. Grounding (Class 1 model only)

Confirm specified or lower grounding impedance between earth pin in AC inlet and externally exposed accessible parts (Video in, Video out, Audio in, Audio out or Fixing screw etc.).

Measuring Method:

Connect milli ohm meter between earth pin in AC inlet and exposed accessible parts. See figure 10 and grounding specifications.

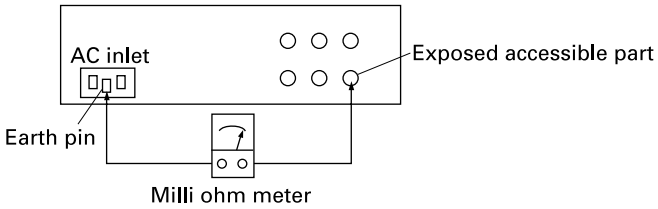

Fig. 10

Grounding Specifications

Region	Grounding Impedance (Z)
USA & Canada	Z ≦ 0.1 ohm
Europe & Australia	Z ≦ 0.5 ohm

AC Line Voltage	Region	Insulation Resistance (R)	Dielectric Strength	Clearance Distance (d), (d')
100 V	Japan	R ≧ 1 MΩ/500 V DC	AC 1 kV 1 minute	d, d' ≧ 3 mm
100 to 240 V			AC 1.5 kV 1 miute	d, d' ≧ 4 mm
110 to 130 V	USA & Canada	1 MΩ ≦ R ≦ 12 MΩ/500 V DC	AC 1 kV 1 minute	d, d' ≧ 3.2 mm
110 to 130 V 200 to 240 V	Europe & Australia	R ≧ 10 MΩ/500 V DC	AC 3 kV 1 minute (Class Ⅱ) AC 1.5 kV 1 minute (Class Ⅰ)	d ≧ 4 mm d' ≧ 8 mm (Power cord) d' ≧ 6 mm (Primary wire)

Table 1 Specifications for each region

AC Line Voltage	Region	Load Z	Leakage Current (i)	a, b, c
100 V	Japan	1 kΩ	i ≦ 1 mA rms	Exposed accessible parts
110 to 130 V	USA & Canada	0.15 μF, 1.5 kΩ	i ≦ 0.5 mA rms	Exposed accessible parts
110 to 130 V 220 to 240 V	Europe & Australia	2 kΩ	i ≦ 0.7 mA peak i ≦ 2 mA dc	Antenna earth terminals
		50 kΩ	i ≦ 0.7 mA peak i ≦ 2 mA dc	Other terminals

Table 2 Leakage current specifications for each region

Note: These tables are unofficial and for reference only. Be sure to confirm the precise values for your particular country and locality.

SECTION 1
DISASSEMBLY

1.1 Disassembly flow chart

This flowchart lists the disassembling steps for the cabinet parts and P.C. boards in order to gain access to item(s) to be serviced. When reassembling, perform the step(s) in reverse order. Bend, route and dress the flat cables as they were originally laid.

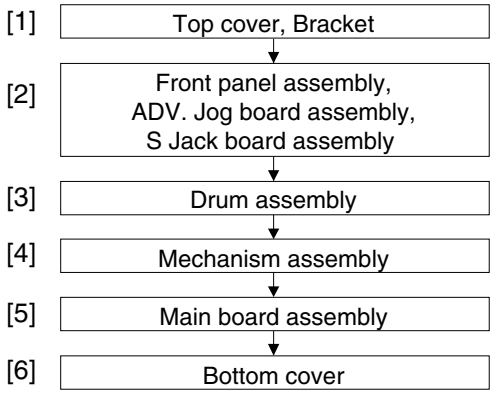

1.2 How to read the disassembly and assembly

<Example>

Step/ Loc No.	Part Name	Fig. No.	Point	Note
[1]	Top cover, Bracket	D1	4(S1a),(S1b),3(L1a), 2(SD1a),(P1a),(W1a), CN1(WR1a), 2(S1c)	<Note 1a>

(1) (2) (3) (4) (5)

(1) Order of steps in Procedure
When reassembling, perform the step(s) in the reverse order. These numbers are also used as the identification (location) No. of parts Figures.
(2) Part name to be removed or installed.
(3) Fig. No. showing procedure or part location.
(4) Identification of part to be removed, unhooked, unlocked, released, unplugged, unclamped or unsoldered.
P= Spring, W= Washer, S= Screw, L= Locking tab, SD= Solder, CN**(WR**)= Remove the wire (WR**) from the connector (CN**).

Note:
- ***The bracketed ( ) WR of the connector symbol are assigned nos. in priority order and do not correspond to those on the spare parts list.***

(5) Adjustment information for installation

1.3 Disassembly/assembly method

Step/ Loc No.	Part Name	Fig. No.	Point	Note
[1]	Top cover, Bracket	D1	4(S1a), (S1b) 2(S1c)	
[2]	Front panel assembly ADV. Jog board assembly S Jack board assembly	D2	CN7001(WR2a), CN916(WR2b), 4(L2a), 3(L2b) 2(S2a) 2(S2b)	<Note 2a> <Note 2b> <Note 2c>
[3]	Drum assembly (Inertia plate) (Roller arm assy)	D3	CON1(WR3a), CN1(WR3b), (S3a), (S3b), (S3c) 4(L3a) (P3), (L3b)	<Note 2c>
[4]	Mechanism assembly	D4	CN2001(WR4a), (S4a),(S4b), (S4c), (S4d)	<Note 2c> <Note 4a>
[5]	Main board assembly	D5	7(L5a), (S5a), 3(S5b)	
[6]	Bottom cover	D6	2(L6a), 9(L6b)	<Note 6a>

<Note 2a>
- When reattaching the Front panel assembly, make sure that the door opener “a” of the Cassette holder assembly is lowered in position prior to the reinstallation.

<Note 2b>
- When reattaching the Front panel assembly, pay careful attention to the switch lever not to make it touch the switch knob “b” of the Main board assembly from the side.

<Note 2c>
- Be careful not to damage the connector and wire etc. during connection and disconnection.
When connecting the wire to the connector, be careful with the wire direction.

<Note 4a>
- When it is required to remove the screws (S4a to S4b) retaining the Mechanism assembly, please refer to the “Procedures for Lowering the Cassette holder assembly”(See on page 1-2).
- When reattaching the Mechanism assembly to the Main board assembly, take care not to damage the sensors and switch on the Main board assembly.
- When removing the Mechanism assembly only, unhook the two spacers connecting it with the Main board assembly with pliers from the back side of the Main board assembly first, and then remove the Mechanism assembly.
- The wire (WR4a) has excess length that may be loose, as it is quite long. After inserting the wire and connectors, the loose portion of the wire should be taken up and accommodated between the A/C head base and the main deck.

<Note 6a>
When removing the bottom cover, push down the two tabs (L6a) to slide the bottom cover.

Procedures for Lowering the Cassette holder assembly

As the mechanism of this unit is integrated with the Housing assembly, the holder must be lowered and the two screws unscrewed when removing the Mechanism assembly.

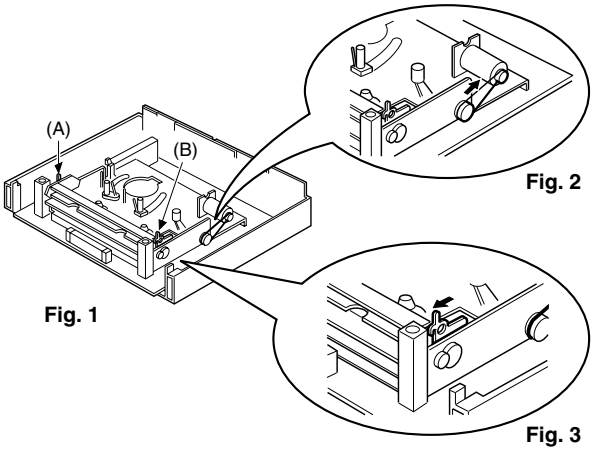

Turn the loading motor pulley in the direction as indicated by Fig.2. As both (A) and (B) levers are lodged twice, push the levers in the direction as indicated by Fig.3 to release them. When pushing the levers, do it in the order of (A), (B), (B), (A). When the holder has been lowered, turn the pulley until the cassette holder is securely in place without allowing any up/down movement.

Procedures for Lowering the Cassette holder assembly

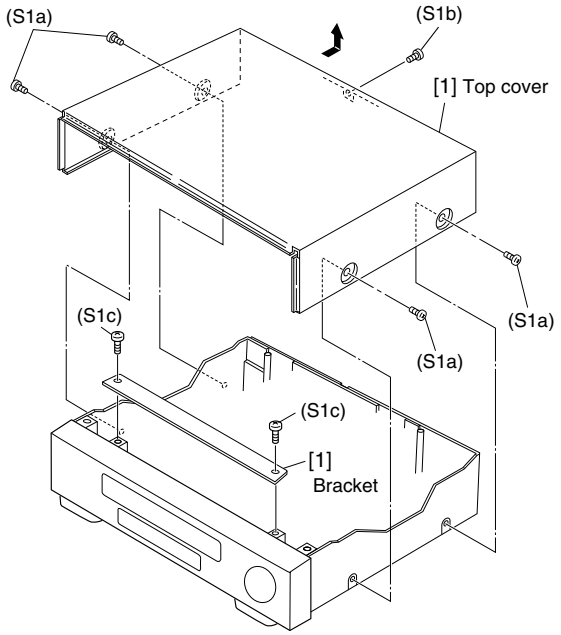

Fig. D1

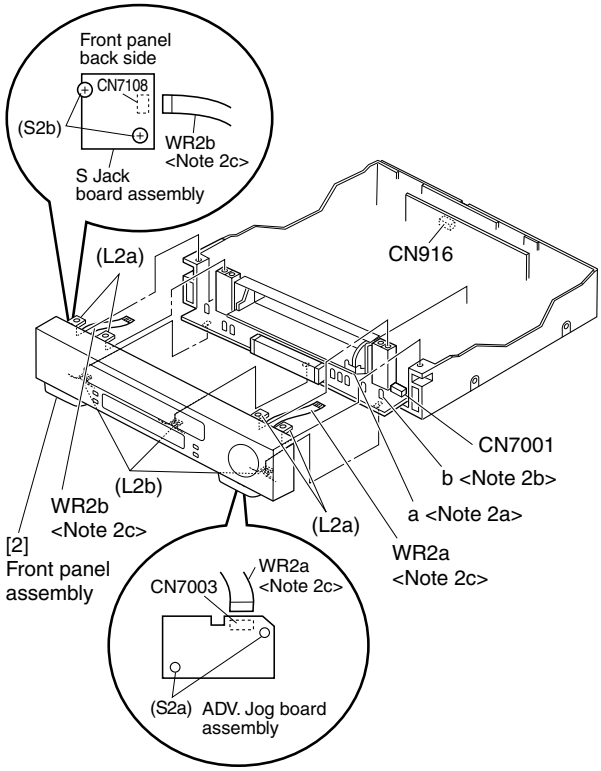

Fig. D2

Note: When installing the Drum assembly, secure the screws (S3a to S3c) in the order of a, b, c.

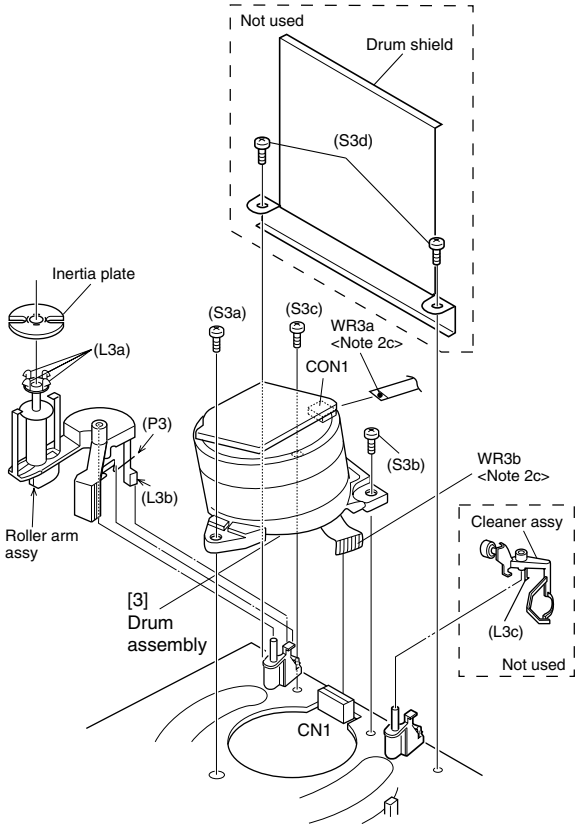

Fig. D3

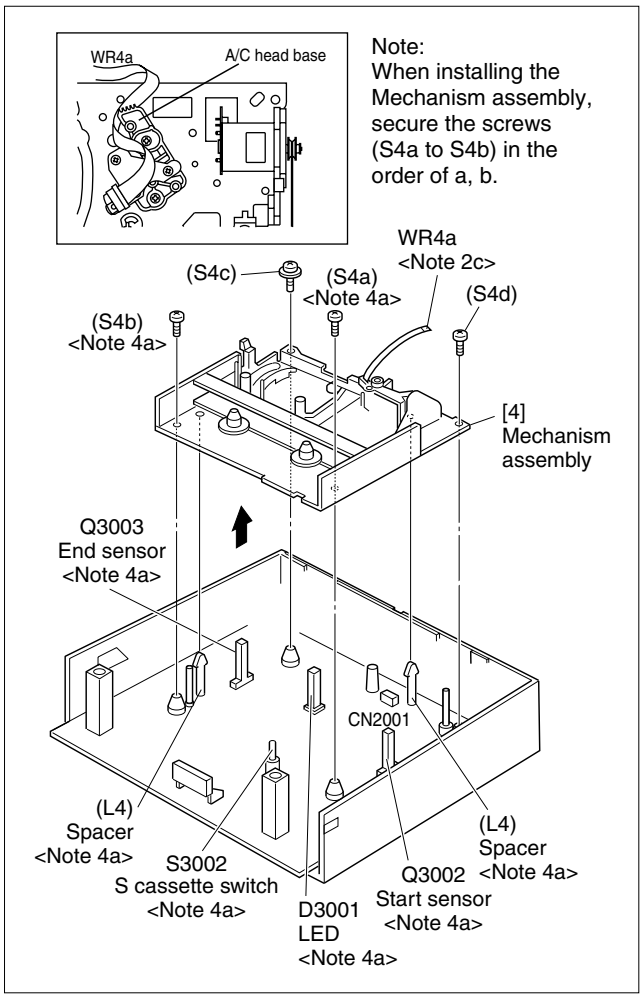

Fig. D4

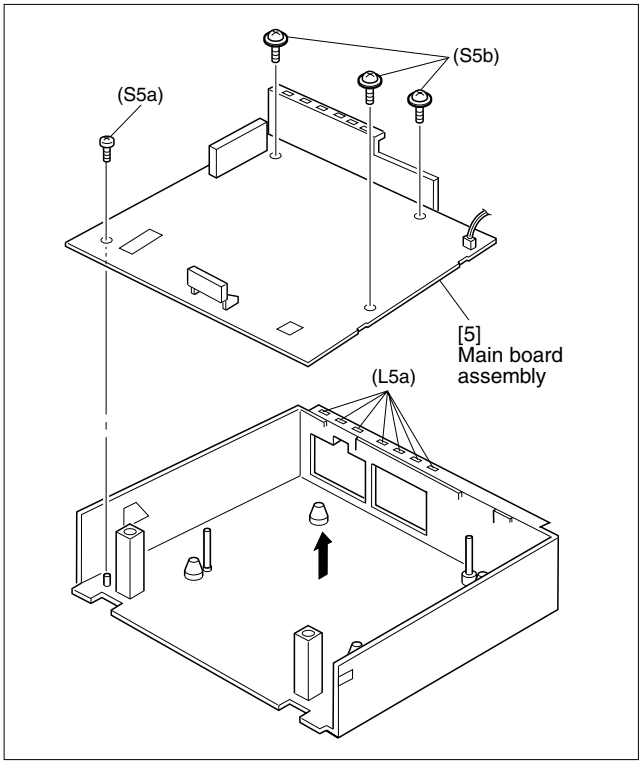

Fig. D5

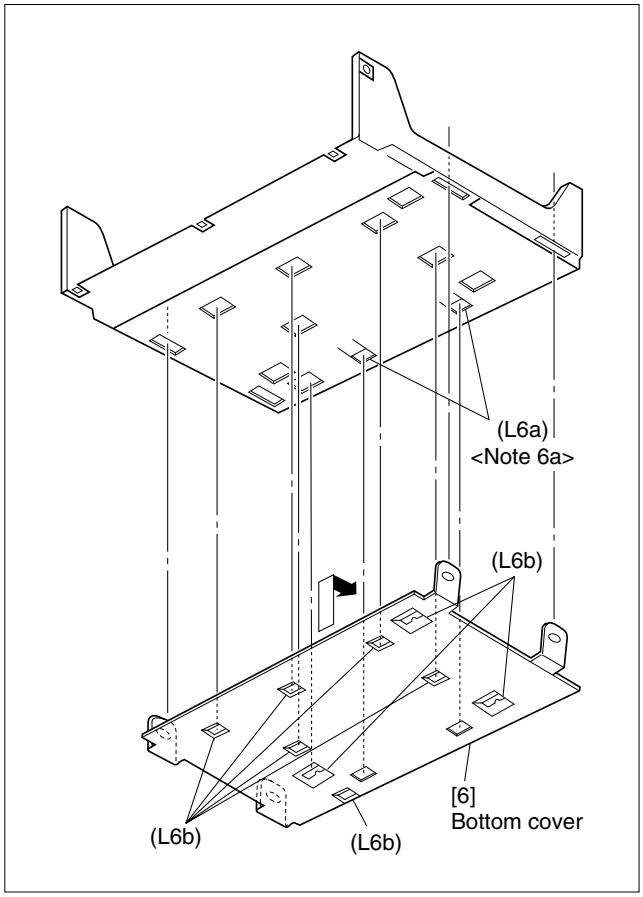

Fig. D6

1.4 Service position

This unit has been designed so that the Mechanism and Main board assemblies can be removed together from the chassis assembly. Before diagnosing or servicing the circuit boards, take out the major parts from the chassis assembly.

1.4.1 How to set the "Service position"

(1) Refer to the disassembly procedure and perform the disassembly of the major parts before removing the Drum assembly.
(2) Lower the cassette holder to prepare for the removal of the Mechanism assembly screws. (Refer to the "Procedures for lowering the Cassette holder assembly" of 1.3 Disassembly/assembly method.)
(3) Remove the combined Mechanism and Main board assemblies.
(4) Connect the wires and connectors of the major parts that have been removed in step (1). (Refer to Fig.1-4-1a.)
(5) Place the combined Mechanism and Main board assemblies upside down.
(6) Insert the power cord plug into the power outlet and then proceed with the diagnostics and servicing of the board assembly.

Notes:

- ***Before inserting the power cord plug into the power outlet, make sure that none of the electrical parts are able to short-circuit between the workbench and the board assembly.***
- ***For the disassembly procedure of the major parts and details of the precautions to be taken, see "1.3 Disassembly/assembly method".***
- ***If there are wire connections from the Main board and Mechanism assemblies to the other major parts, be sure to remove them (including wires connected to the major parts) first before performing step (2).***
- ***When carrying out diagnosis and repair of the Main board assembly in the "Service position", be sure to ground both the Main board and Mechanism assemblies. If they are improperly grounded, there may be noise on the playback picture or FDP counter display may move even when the mechanism is kept in an inoperative status.***
- ***In order to diagnose the playback or recording of the cassette tape, set the Mechanism assembly to the required mode before placing it upside down. If the mechanism mode is changed (including ejection) while it is in an upside down position the tape inside may be damaged.***

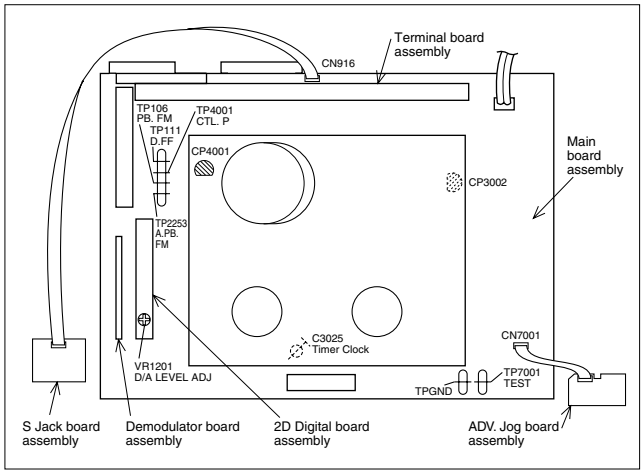

Fig. 1-4-1a

1.5 Mechanism service mode

This model has a unique function to enter the mechanism into every operation mode without loading of any cassette tape. This function is called the "Mechanism service mode".

1.5.1 How to set the "Mechanism service mode"

(1) Unplug the power cord plug from the power outlet.
(2) Connect TPGND and TP7001(TEST) on the Main board assembly with a jump wire.
(3) Insert the power cord plug into the power outlet.
(4) With lock levers (A) (B) on the left and right of the Cassette holder assembly pulled toward the front, slide the holder in the same direction as the cassette insertion direction. (For the positions of lock levers (A) (B), refer to the "Procedures for lowering the Cassette holder assembly" of 1.3 Disassembly/assembly method.)
(5) The cassette holder lowers and, when the loading has completed, the mechanism enters the desired mode.

1.6 Jig RCU mode

This unit uses the following two modes for receiving remote control codes.

1) User RCU mode : Ordinary mode for use by the user.
2) Jig RCU mode : Mode for use in production and servicing.

When using the Jig RCU, it is required to set the VCR to the Jig RCU mode (the mode in which codes from the Jig RCU can be received). As both of the above two modes are stored in the EEPROM, it is required to set the VCR back to the User RCU mode each time that an adjustment is made or to check that the necessary operations have been completed. These modes can be set by the operations described below.

1.6.1 Setting the Jig RCU mode

(1) Unplug the power cord plug from the power outlet.
(2) Press and hold the "REC" and "PAUSE" buttons on the VCR simultaneously, while plugging the power cord plug into the power outlet.
When the VCR is set to the Jig RCU mode, the symbols (" : ") in the time display of the FDP are turned off.

1.6.2 Setting the User RCU mode

(1) Turn off the power.
(2) Press the "REC" and "PAUSE" buttons of the VCR simultaneously. Alternatively, transmit the code "80" from the Jig RCU.

1.7 Servicing items related to video navigation

The video navigation function built into this unit works by storing the video navigation data in the internal EEPROM and writing data in the cassette tape simultaneously.
The video navigation data stored in the EEPROM cannot be copied to another EEPROM. Therefore, when the circuit board mounting the EEPROM is replaced, the original EEPROM should be mounted on the new board. This will make the user's video navigation data usable with the new circuit board after replacement. However, the user's data cannot be restored if the EEPROM on the original circuit board is damaged.

Note:

- ***If the circuit board mounting the EEPROM or the EEPROM alone has been replaced, it is required to perform confirmation/re-adjustment on all of the adjustment items using the EVR as well as those which are adjusted by transmitting adjustment codes from the Jig RCU.***

1.8 Emergency display function

This unit has a function for storing the history of the past two emergencies (EMG) and displaying them on each FDP (or OSD). With the status of the VCR and mechanism at the moment an emergency occurred can also be confirmed.

FDP display model
[FDP display]

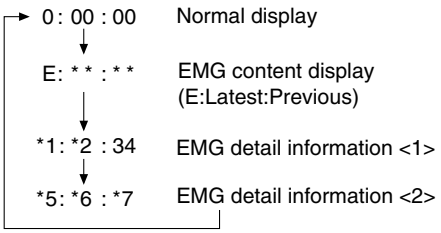

FDP (7segment LED) display model
[FDP display]

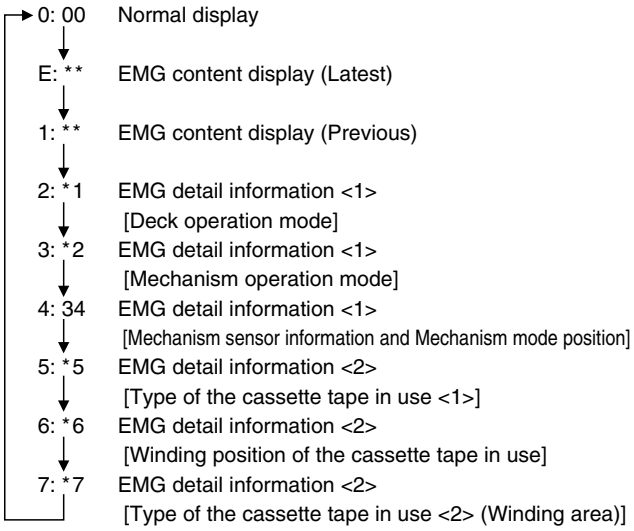

OSD display model
[OSD display]

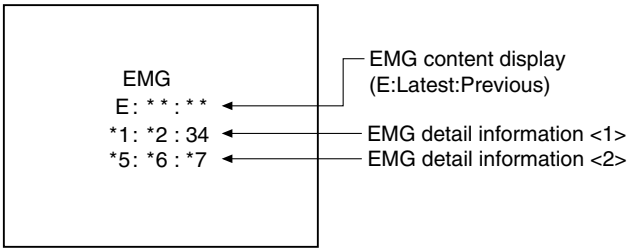

Notes:

- ***The EMG detail information <1><2> show the information on the latest EMG.***
  It becomes " – – : – – : – –" when there is no latest EMG record.
- ***When using the Jig RCU, it is required to set the VCR to the Jig RCU mode (the mode in which codes from the Jig RCU can be received).***

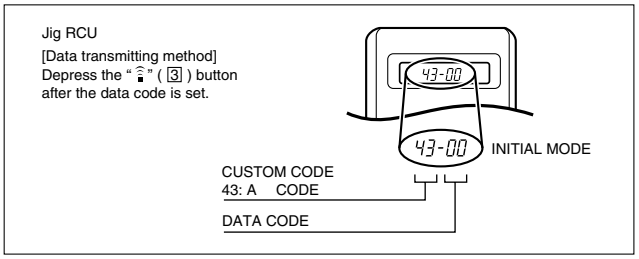

Fig. 1-8a Jig RCU [PTU94023B]

1.8.1 Displaying the EMG information

(1) Transmit the code "59" from the Jig RCU.
The FDP shows the EMG content in the form of "E: * * : * * ".

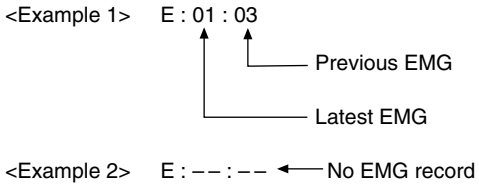

(2) Transmit the code "59" from the Jig RCU again.
The FDP shows the EMG detail information <1> in the form of " * 1 : * 2 : 34 ".

- * 1 : Deck operation mode at the moment of EMG
- * 2 : Mechanism operation mode at the moment of EMG
- 3– : Mechanism sensor information at the moment of EMG
- –4 : Mechanism mode position at the moment of EMG

(3) Transmit the code "59" from the Jig RCU once again.
The FDP shows the EMG detail information <2> in the form of " * 5 : * 6 : * 7 ".

- * 5 : Type of the cassette tape in use <1> .
- * 6 : Winding position of the cassette tape in use
- * 7 : Type of the cassette tape in use <2> (Winding area)

(4) Transmit the code "59" from the Jig RCU once again to reset the display.

Notes:

- ***For the OSD display model, all EMG information are showed by transmitting first code from the Jig RCU.***
- ***For the EMG content, see "1.8.3 EMG content description".***
- ***For the EMG detail information <1> , see "1.8.4 EMG detail information <1> ".***
- ***For the EMG detail information <2> , see "1.8.5 EMG detail information <2>".***

1.8.2 Clearing the EMG history

(1) Display the EMG history.
(2) Transmit the code "36" from the Jig RCU.
(3) Reset the EMG display.

(EMG-02e)

1.8.3 EMG content description

Note: ***EMG contents "E08/E09" are for the model with Dynamic Drum (DD).***

FDP	CONTENT	CAUSE
E01: Loading EMG	When the mechanism mode cannot be changed to another mode even when the loading motor has rotated for more than 4 seconds in the loading direction, [E:01] is identified and the power is turned off.	1. The mechanism is locked in the middle of mode transition. 2. The mechanism is locked at the loading end due to the encoder position reading error during mode transition. 3. Power is not supplied to the loading MDA.
E02: Unloading EMG	When the mechanism mode cannot be changed to another mode even when the loading motor has rotated for more than 4 seconds in the unloading direction, [E:02] is identified and the power is turned off.	1. The mechanism is locked in the middle of mode transition. 2. The mechanism is locked at the unloading end due to the encoder position reading error during mode transition. 3. Power is not supplied to the loading MDA.
E03: Take Up Reel Pulse EMG	When the take-up reel pulse has not been generated for more than 4 seconds in the capstan rotating mode, [E:03] is identified, the pinch rollers are turned off and stopped, and the power is turned off. However, the reel EMG is not detected in STILL/SLOW modes.	1. The take-up reel pulse is not generated in the FWD transport modes (PLAY/FWD SEARCH/FF, etc.) because; 1) The idler gear is not meshed with the take-up reel gear; 2) The idler gear is meshed with the take-up reel gear, but incapable of winding due to too large mechanical load (abnormal tension); 3) The take-up reel sensor does not output the FG pulse. 2. The supply reel pulse is not generated in the REV transport modes (REV SEARCH/REW, etc.) because; 1) The idler gear is not meshed with the supply reel gear. 2) The idler gear is meshed with the supply reel gear, but incapable of winding due to too large a mechanical load (abnormal tension); 3) The supply reel sensor does not output the FG pulse. 3. Power is not supplied to the reel sensors.
E04: Drum FG EMG	When the drum FG pulse has not been input for more than 3 seconds in the drum rotating mode, [E:04] is identified, the pinch rollers are turned off and stopped, and the power is turned off.	1. The drum could not start or the drum rotation has stopped due to too large a load on the tape, because; 1) The tape tension is abnormally high; 2) The tape is damaged or a foreign object (grease, etc.) adheres to the tape. 2. The drum FG pulse did not reach the System controller CPU because; 1) The signal circuit is disconnected in the middle; 2) The FG pulse generator (hall device) of the drum is faulty. 3. The drum control voltage (DRUM CTL V) is not supplied to the MDA. 4. Power is not supplied to the drum MDA.
E05: Cassette Eject EMG	When the eject operation does not complete in 3 seconds after the start, [E:05] is identified, the pinch rollers are turned off and stopped, and the power is turned off. When the cassette insertion operation does not complete in 3 seconds after the start, the cassette is ejected. In addition, when the operation does not complete within 3 seconds after the start, [E:05] is also identified and the power is turned off immediately.	1. The cassette cannot be ejected due to a failure in the drive mechanism of the housing. 2. When the housing load increases during ejection, the loading motor is stopped because of lack of headroom in its drive torque. Housing load increasing factors: Temperature environment (low temperature, etc.), mechanism wear or failure. 3. The sensor/switch for detecting the end of ejection are not functioning normally. 4. The loading motor drive voltage is lower than specified or power is not supplied to the motor (MDA). 5. When the user attempted to eject a cassette, a foreign object (or perhaps the user's hand) was caught in the opening of the housing.
E06: Capstan FG EMG	When the capstan FG pulse has not been generated for more than 1 second in the capstan rotating mode, [E:06] is identified, the pinch rollers are turned off and stopped, and the power is turned off.However, the capstan EMG is not detected in STILL/SLOW/FF/REW modes.	1. The capstan could not start or the capstan rotation has stopped due to too large a load on the tape, because; 1) The tape tension is abnormally high (mechanical lock); 2) The tape is damaged or a foreign object (grease, etc.) is adhered to the tape (occurrence of tape entangling, etc.). 2. The capstan FG pulse did not reach the System controller CPU because; 1) The signal circuit is disconnected in the middle; 2) The FG pulse generator (MR device) of the capstans is faulty. 3. The capstan control voltage (CAPSTAN CTL V) is not supplied to the MDA. 4. Power is not supplied to the capstan MDA.
E07: SW Power Short-Circuit EMG	When short-circuiting of the SW power supply with GND has lasted for 0.5 second or more, [E:07] is identified, all the motors are stopped and the power is turned off.	1. The SW 5 V power supply circuit is shorted with GND. 2. The SW 12 V power supply circuit is shorted with GND.
E08: DD Initialized (Absolute Position Sensor) EMG	When DD tilting does not complete in 4 seconds, [E:08] is identified, the tilt motor is stopped and the power is turned off.	1. The absolute value sensor is defective. (The soldered parts have separated.) 2. The pull-up resistor at the absolute sensor output is defective. (The soldered parts have separated.) 3. Contact failure or soldering failure of the pins of the connector (board-to-board) to the absolute value sensor. 4. The absolute value sensor data is not sent to the System Controller CPU.
E09: DD FG EMG	When the DD FG pulse is not generated within 2.5 seconds, [E:09] is identified, the tilt motor is stopped and the power is turned off.	1. The FG sensor is defective. (The soldered parts have separated.) 2. The pull-up resistor at the FG sensor output is defective. (The soldered parts have separated.) 3. Contact failure or soldering failure of the pins of the connector (board-to-board) to the FG sensor. 4. The power to the sensor is not supplied. (Connection failure/soldering failure) 5. The FG pulse is not sent to the System Controller CPU. 6. The tilt motor is defective. (The soldered parts have separated.) 7. The drive power to the tilt motor is not supplied. (Connection failure/soldering failure) 8. The tilt motor drive MDA - IC is defective. 9. Auto-recovery of the DD tilting cannot take place due to overrun.
E0A: Supply Reel Pulse EMG	When the supply reel pulse has not been generated for more than 10 seconds in the capstan rotating mode, [E:0A] is identified and the cassette is ejected (but the power is not turned off). However, note that the reel EMG is not detected in the SLOW/STILL mode.	1. The supply reel pulse is not generated in the FWD transport mode (PLAY/FWD SEARCH/FF, etc.) because; 1) PLAY/FWD or SEARCH/FF is started while the tape in the inserted cassette is cut in the middle; 2) A mechanical factor caused tape slack inside and outside the supply reel side of the cassette shell. In this case, the supply reel will not rotate until the tape slack is removed by the FWD transport, so the pulse is not generated until then; 3) The FG pulse output from the supply reel sensor is absent. 2. The take-up reel pulse is not generated in the REV transport mode (REV SEARCH/REW, etc.). 1) REV SEARCH/REW is started when the tape in the inserted cassette has been cut in the middle; 2) A mechanical factor caused tape slack inside and outside the take-up reel side of the cassette shell. In this case, the supply reel will not rotate until the tape slack is removed by the REV transport, so the pulse will not be generated until that time; 3) The FG pulse output from the take-up reel sensor is absent. 3. The power to a reel sensor is not supplied.
EC1 or EU1: Head clog warning	Presupposing the presence of the control pulse output in the PLAY mode, when the value obtained by mixing the two V.FM output channels (without regard to the A.FM output) has remained below a certain threshold level for more than 10 seconds, [E:C1] or [E:U1] is identified and recorded in the emergency history. During the period in which a head clog is detected, the FDP and OSD repeat the "3-second warning display" and "7-second noise picture display" alternately. EMG code : "E:C1" or "E:U1" / FDP : "U:01" / OSD : "Try cleaning tape." or "Use cleaning cassette." The head clog warning is reset when the above-mentioned threshold has been exceeded for more than 2 seconds or the mode is changed to another mode than PLAY.	

Table 1-8-3a

1.8.4 EMG detail information <1>

The status (electrical operation mode) of the VCR and the status (mechanism operation mode/sensor information) of the mechanism in the latest EMG can be confirmed based on the figure in EMG detail information <1> .

[FDP/OSD display]

*1 : *2 : 34

*1 : Deck operation mode at the moment of EMG
*2 : Mechanism operation mode at the moment of EMG
3– : Mechanism sensor information at the moment of EMG
–4 : Mechanism mode position at the moment of EMG

Note:

- ***For EMG detailed information <1>, the content of the code that is shown on the FDP (or OSD) differs depending on the parts number of the system control microprocessor (IC3001) of the VCR. The system control microprocessor parts number starts with two letters, refer these to the corresponding table.***

***1 : Deck operation mode**
[Common table of MN*, HD* and M3*]

Display		Deck operation mode
MN*/M3*	HD*	
00	-	Mechanism being initialized
01	00	STOP with pinch roller pressure off (or tape present with P.OFF)
02	01	STOP with pinch roller pressure on
03	-	POWER OFF as a result of EMG
04	04	PLAY
0C	0E	REC
10	11	Cassette ejected
20	22	FF
21	-	Tape fully loaded, START sensor ON, short FF
22	-	Cassette identification FWD SEARCH before transition to FF (SP x7-speed)
24	26	FWD SEARCH (variable speed) including x2-speed
2C	2E	INSERT REC
40	43	REW
42	-	Cassette identification REV SEARCH before transition to REW (SP x7-speed)
44	47	REV SEARCH (variable speed)
4C	4C	AUDIO DUB
6C	6E	INSERT REC (VIDEO + AUDIO)
84	84	FWD STILL / SLOW
85	85	REV STILL / SLOW
8C	8F	REC PAUSE
8D	-	Back spacing
8E	-	Forward spacing (FWD transport mode with BEST function)
AC	AF	INSERT REC PAUSE
AD	-	INSERT REC back spacing
CC	CD	AUDIO DUB PAUSE
CD	-	AUDIO DUB back spacing
EC	EF	INSERT REC (VIDEO + AUDIO) PAUSE
ED	-	INSERT REC (VIDEO + AUDIO) back spacing

***2 : Mechanism operation mode**
[Common table of MN* and M3*]

Display		Mechanism operation mode
MN*	M3*	
00	00	Command standby (Status without executing command)
02	02	POWER OFF by EMG occurrence
04	04	Moving to the adjacent position in the LOAD direction
06	06	Moving to the adjacent position in the UNLOAD direction
08	08	Cassette ejection being executed / Cassette housing ejection being executed
-	0A	Mode transition to STOP with cassette ejection end
0A	0C	Cassette insertion being executed
0C	0E	Tape being loaded
0E	10	Tape being unloaded
10	12	Mode transition to STOP with pinch roller compression ON
12	14	Mode transition to STOP with pinch roller compression OFF
14	16	Mode transition to STOP with pinch roller compression OFF as a result of POWER OFF
16	18	Mode transition to STOP with pinch roller compression ON as a result of POWER ON
18	1A	Mode transition to PLAY
1A	1C	Mode transition to FWD SEARCH
1C	1E	Mode transition to REC
1E	20	Mode transition to FWD STILL / SLOW
20	22	Mode transition to REV STILL / SLOW
22	24	Mode transition to REV SEARCH
24	26	Mode transition from FF / REW to STOP
26	28	Mode transition to FF
28	2A	Mode transition to REW
2A	2C	4 sec. of REV as a result of END sensor going ON during loading
2C	2E	Short FF / REV as a result of END sensor going ON during unloading
2E	30	Mechanism position being corrected due to overrun
80	80	Mechanism in initial position (Dummy command)

[Table of HD*]

Display	Mechanism operation mode
00	STOP with pinch roller pressure off
01	STOP with pinch roller pressure on
02	U/L STOP (or tape being loaded)
04	PLAY
05	PLAY (x1-speed playback using JOG)
0E	REC
11	Cassette ejected
22	FF
26	FWD SEARCH (variable speed) including x2-speed
2E	INSERT REC
43	REW
47	REV SEARCH
4C	AUDIO DUB
6E	INSERT REC (VIDEO + AUDIO)
84	FWD STILL/SLOW
85	REV STILL/SLOW
8F	REC PAUSE
AF	INSERT REC PAUSE
C7	REV SEARCH (x1-speed reverse playback using JOG)
CD	AUDIO DUB PAUSE
EF	INSERT REC (VIDEO + AUDIO) PAUSE
F0	Mechanism being initialized
F1	POWER OFF as a result of EMG
F2	Cassette being inserted
F3	Cassette being ejected
F4	Transition from STOP with pinch roller pressure on to STOP with pinch roller pressure off
F5	Transition from STOP with pinch roller pressure on to PLAY
F6	Transition from STOP with pinch roller pressure on to REC
F7	Cassette type detection SEARCH before FF/REW is being executed
F8	Tape being unloaded
F9	Transition from STOP with pinch roller pressure off to STOP with pinch roller pressure on
FA	Transition from STOP with pinch roller pressure off to FF/REW
FB	Transition from STOP with pinch roller pressure off to REC.P (T.REC,etc.)
FC	Transition from STOP with pinch roller pressure off to cassette type detection SEARCH
FD	Short REV being executed after END sensor on during unloading
FE	Tension loosening being executed after tape loading (STOP with pinch roller pressure on)

3– : Mechanism sensor information
[Common table of MN*, HD* and M3*]

Display	Mechanism sensor information				
	MN* / HD* S-VHS SW	M3* CASS SW	REC safety SW	Start sensor	End sensor
0-	VHS	Cassette insertion	Tab broken	ON	ON
1-	VHS	Cassette insertion	Tab broken	ON	OFF
2-	VHS	Cassette insertion	Tab broken	OFF	ON
3-	VHS	Cassette insertion	Tab broken	OFF	OFF
4-	VHS	Cassette insertion	Tab present	ON	ON
5-	VHS	Cassette insertion	Tab present	ON	OFF
6-	VHS	Cassette insertion	Tab present	OFF	ON
7-	VHS	Cassette insertion	Tab present	OFF	OFF
8-	S-VHS	Cassette ejection	Tab broken	ON	ON
9-	S-VHS	Cassette ejection	Tab broken	ON	OFF
A-	S-VHS	Cassette ejection	Tab broken	OFF	ON
B-	S-VHS	Cassette ejection	Tab broken	OFF	OFF
C-	S-VHS	Cassette ejection	Tab present	ON	ON
D-	S-VHS	Cassette ejection	Tab present	ON	OFF
E-	S-VHS	Cassette ejection	Tab present	OFF	ON
F-	S-VHS	Cassette ejection	Tab present	OFF	OFF

–4 : Mechanism mode position
[Common table of MN*, HD* and M3*]

Display			Mechanism mode position
MN*	HD*	M3*	
-0	-7	-	Initial value
-1	-0	-	EJECT position
-	-	-0	EJECT position (Cassette housing drive mode)
-2	-7	-	Housing operating
-	-	-1	Between EJECT and U / L STOP
-3	-1	-2	U / L STOP position
-	-	-3	Guide arm drive position
-4	-7	-4	Tape being loaded / unloaded (When the pole base is located on the front side of the position just beside the drum)
-5	-2	-5	Tape being loaded / unloaded (When the pole base is located on the rear side of the position just beside the drum)
-6	-7	-6	Pole base compressed position
-7	-3	-F	FF / REW position
-8	-7	-F	Between FF / REW and STOP with pinch roller compression ON
-9	-4	-F	STOP with pinch roller compression OFF
-A	-7	-E	Between STOP with pinch roller compression OFF and REV
-B	-5	-	REV (REV STILL / SLOW) position
-	-	-D	REV position
-	-	-C	Between REV and REV STILL / SLOW
-	-	-B	REV STILL / SLOW position
-C	-7	-	Between REV and FWD
-	-	-A	Between REV STILL / SLOW and FWD STILL / SLOW
-D	-6	-	FWD (FWD STILL / SLOW) position
-	-	-9	FWD STILL / SLOW position
-E	-7	-	Between FWD and PLAY
-	-	-8	Between FWD STILL / SLOW and PLAY
-F	-6	-7	PLAY position

Note:

- ***In the case of the "HD*" microprocessor, as the display is always "-7" at any intermediate position between modes, the position of transitory EMG may sometimes not be located.***

1.8.5 EMG detail information <2>

The type of the cassette tape and the cassette tape winding position can be confirmed based on the figure in EMG detail information <2> .

[FDP/OSD display]

*5 : *6 : *7

*5 : Type of the cassette tape in use <1>
*6 : Winding position of the cassette tape in use
*7 : Type of the cassette tape in use <2> (Winding area)

Note:

- ***EMG detail information <2> is the reference information stored using the remaining tape detection function of the cassette tape. As a result, it may not identify cassette correctly when a special cassette tape is used or when the tape has variable thickness.***

*5 : Cassette tape type <1>

Display	Cassette tape type <1>
00	Cassette type not identified
16	Large reel/small reel (T-0 to T-15/T-130 to T-210) not classified
82	Small reel, thick tape (T-120) identified/thin tape (T-140) identified
84	Large reel (T-0 to T-60) identified
92	Small reel, thick tape (T-130) identified/thin tape (T-160 to T-210) identified
93	Small reel, thick tape/C cassette (T-0 to T-100/C cassette) not classified
C3	Small reel, thick tape/C cassette (T-0 to T-100/C cassette) being classified
D3	Small reel, thick tape/C cassette (T-0 to T-100/C cassette) being classified
E1	C cassette, thick tape (TC-10 to TC-20) identified
E2	Small reel, thick tape (T-0 to T-100) identified
E9	C cassette, thin tape (TC-30 to TC-40) identified
F1	C cassette, thick tape/thin tape (TC-10 to TC-40) not classified

Notes:

- ***Cassette tape type <1> is identified a few times during mode transition and the identification count is variable depending on the cassette tape type. If an EMG occurs in the middle of identification, the cassette tape type may not be able to be identified.***
- ***If other value than those listed in the above table is displayed, the cassette tape type is not identified.***

*6 : Cassette tape winding position

The cassette tape winding position at the moment of EMG is displayed by dividing the entire tape (from the beginning to the end) in 22 sections using a hex number from “00” to “15”.

“00” : End of winding
“15” : Beginning of winding
“FF or – –” : Tape position not identified

*7 : Cassette tape type <2> (Winding area)

Display	Cassette tape type <2>	
00	Cassette type not identified	
07	Small reel, thick tape	T-5
08 - 0E	C cassette, thick tape	TC-10
09 - 15	C cassette, thick tape	TC-20P
0A - 0B	Small reel, thick tape	T-20
0A - 16	C cassette, thin tape	TC-30
0A - 16	C cassette, thin tape	TC-40
0D - 0F	Small reel, thick tape	T-40
11 - 14	Small reel, thick tape	T-60
15 - 18	Small reel, thick tape	T-80 / DF-160
17 - 1A	Small reel, thick tape	T-90 / DF-180
19 - 1D	Small reel, thick tape	T-100
1D - 21	Small reel, thick tape	T-120 / DF-240
1E - 1F	Small reel, thin tape	T-140
1F - 23	Small reel, thick tape	T-130
21 - 23	Small reel, thin tape	T-160
21 - 23	Small reel, thin tape	T-168
22 - 24	Small reel, thick tape	DF-300
22 - 24	Small reel, thin tape	T-180 / DF-360
22 - 24	Small reel, thin tape	T-210 / DF-420
22 - 23	Large reel	T-5
23 - 24	Large reel	T-10
25 - 26	Large reel	T-20
27 - 29	Large reel	T-30
29 - 2B	Large reel	T-40
2D - 2F	Large reel	T-60

Note:

- ***The values of cassette tape type <2> in the above table are typical values with representative cassette tapes.***

SECTION 2
MECHANISM ADJUSTMENT

2.1 Before starting repair and adjustment

2.1.1 Precautions

(1) Unplug the power cord plug of the VCR before using your soldering iron.
(2) Take care not to cause any damage to the conductor wires when plugging and unplugging the connectors.
(3) Do not randomly handle the parts without identifying where the trouble is.
(4) Exercise enough care not to damage the lugs, etc. during the repair work.
(5) When reattaching the front panel assembly, make sure that the door opener of the cassette holder assembly is lowered in position prior to the reinstallation. (See SECTION 1 DISASSEMBLY.)
(6) When using the Jig RCU, it is required to set the VCR to the Jig RCU mode (the mode in which codes from the Jig RCU can be received). (See SECTION 1 DISASSEMBLY.)

2.1.2 Checking for proper mechanical operations

Enter the mechanism service mode when you want to operate the mechanism when no cassette is loaded. (See SECTION 1 DISASSEMBLY.)

2.1.3 Manually removing the cassette tape

1. In case of electrical failures

If you cannot remove the cassette tape which is loaded because of any electrical failure, manually remove it by taking the following steps.

(1) Unplug the power cord plug from the power outlet.
(2) Refer to the disassembly procedure and perform the disassembly of the major parts before removing the drum assembly.
(3) Unload the pole base assembly by manually turning the loading motor of the mechanism assembly toward the front. In doing so, hold the tape by the hand to keep the slack away from any grease. (See Fig.2-1-3a.)
(4) Bring the pole base assembly to a pause when it reaches the position where it is hidden behind the cassette tape.
(5) Move the top guide toward the drum while holding down the lug (A) of the bracket retaining the top guide. Likewise hold part (B) down and remove the top guide.
Section (C) of the top guide is then brought under the cassette lid. Then remove the top guide by pressing the whole cassette tape down. (See Fig.2-1-3b.)
(6) Remove the cassette tape by holding both the slackened tape and the cassette lid.
(7) Take up the slack of the tape into the cassette. This completes removal of the cassette tape.

Note:

- ***For the disassembly procedure of the major parts and details of the precautions to be taken, see "SECTION 1 DISASSEMBLY".***

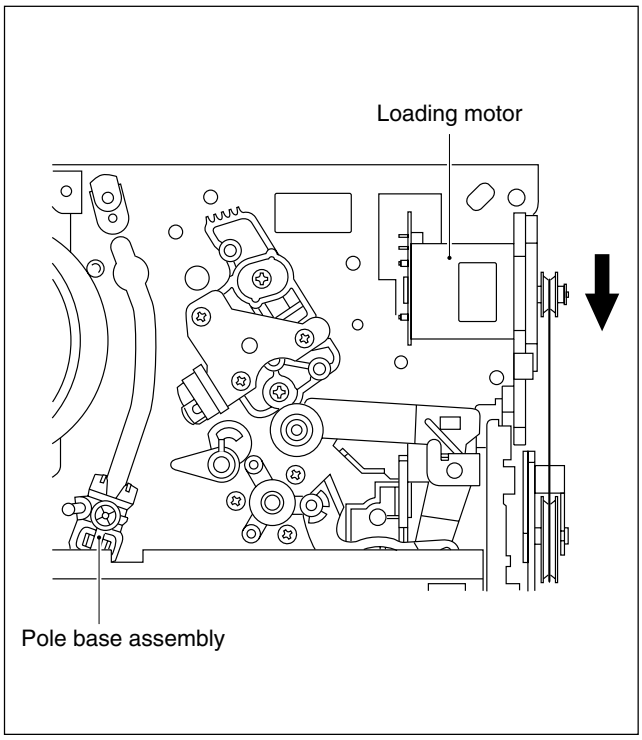

Fig. 2-1-3a

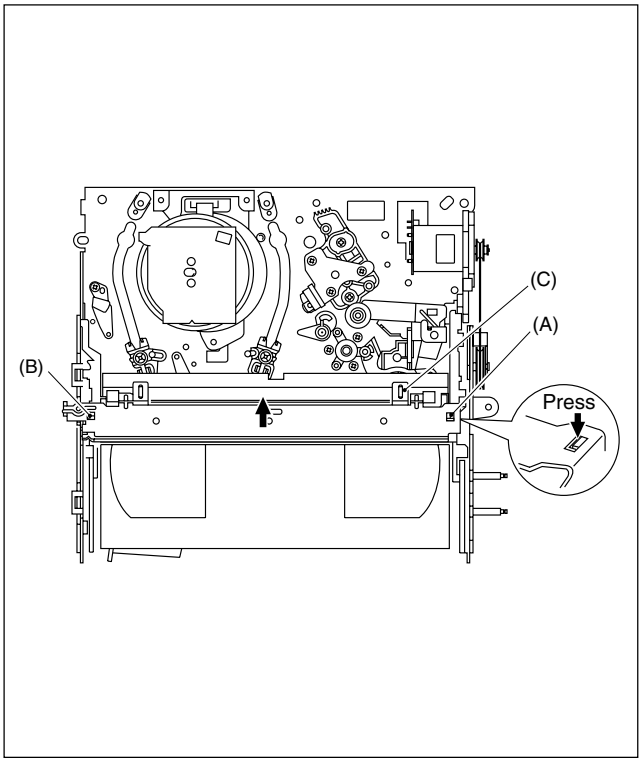

Fig. 2-1-3b

2. In case of mechanical failure

If you cannot remove the cassette tape which is loaded because of any mechanical failure, manually remove it by taking the following steps.

(1) Unplug the power cable and remove the top cover, front panel assembly and others so that the mechanism assembly is visible. (See SECTION 1 DASASSEMBLY.)
(2) While keeping the tension arm assembly of the mechanism assembly free from tension, pull the tape on the pole base assembly (supply or take-up side) out of the guide roller. (See Fig.2-1-3c.)
(3) Take the spring of the pinch roller arm assembly off the hook of the press lever assembly, and detach it from the tape. (See Fig.2-1-3d.)
(4) In the same way as in the electrical failure instructions in 2.1.3-1(5), remove the top guide.
(5) Raise the cassette tape cover. By keeping it in that position, draw out the cassette tape case from the cassette holder and take out the tape.
(6) By hanging the pinch roller arm assembly spring back on the hook, take up the slack of the tape into the cassette.

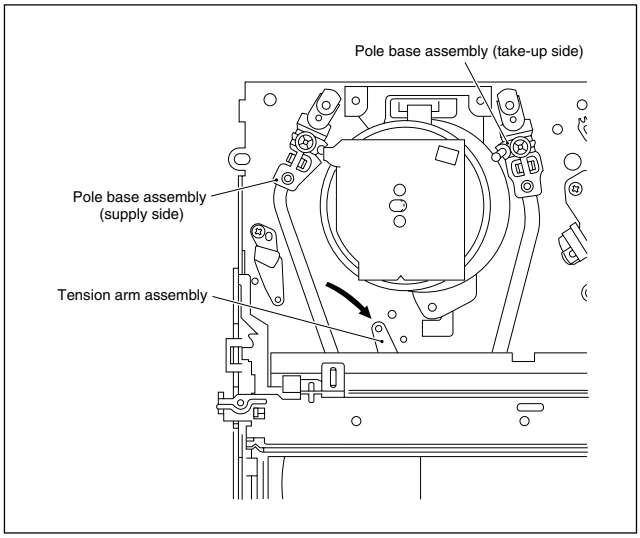

Fig. 2-1-3c

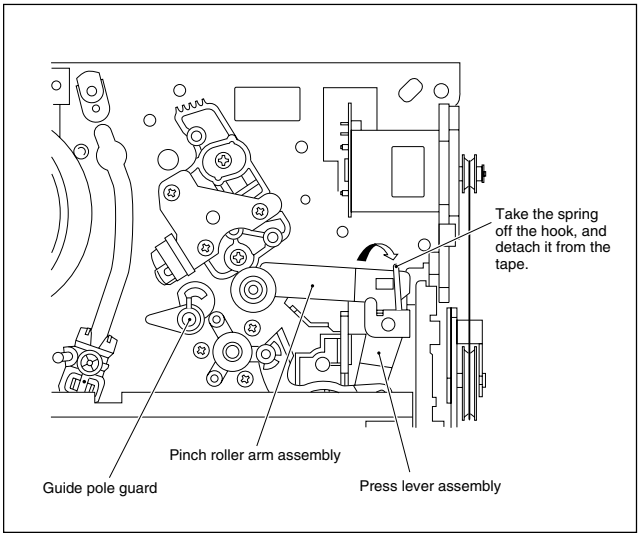

Fig. 2-1-3d

2.1.4 Jigs and tools required for adjustment

Roller driver PTU94002	A/C head positioning tool PTU94010	Torque gauge PUJ48075-2
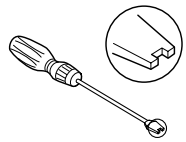		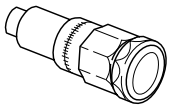
Back tension cassette gauge PUJ48076-2	Jig RCU PTU94023B	
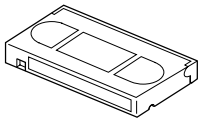	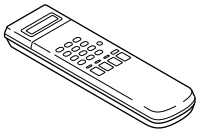	
Alignment tape (SP, stairstep, PAL) MHPE	Alignment tape (LP, stairstep, PAL) MHPE-L	
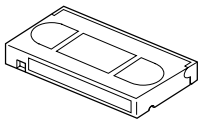	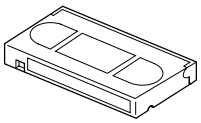	

2.1.5 Maintenance and inspection

1. Location of major mechanical parts

In this chapter, the two mechanism speeds are described by comparing the speeds of the standard type and the high-speed FF/REW type.
It is possible to distinguish between these two types of mechanism by the diameters of their capstan pulleys.
The capstan pulley diameter for the standard type is approx. 32 mm.
The capstan pulley diameter for the high-speed FF/REW type is approx. 43 mm.
For information on the different parts used in the two mechanism types, please refer to the “Replacement of major parts”.

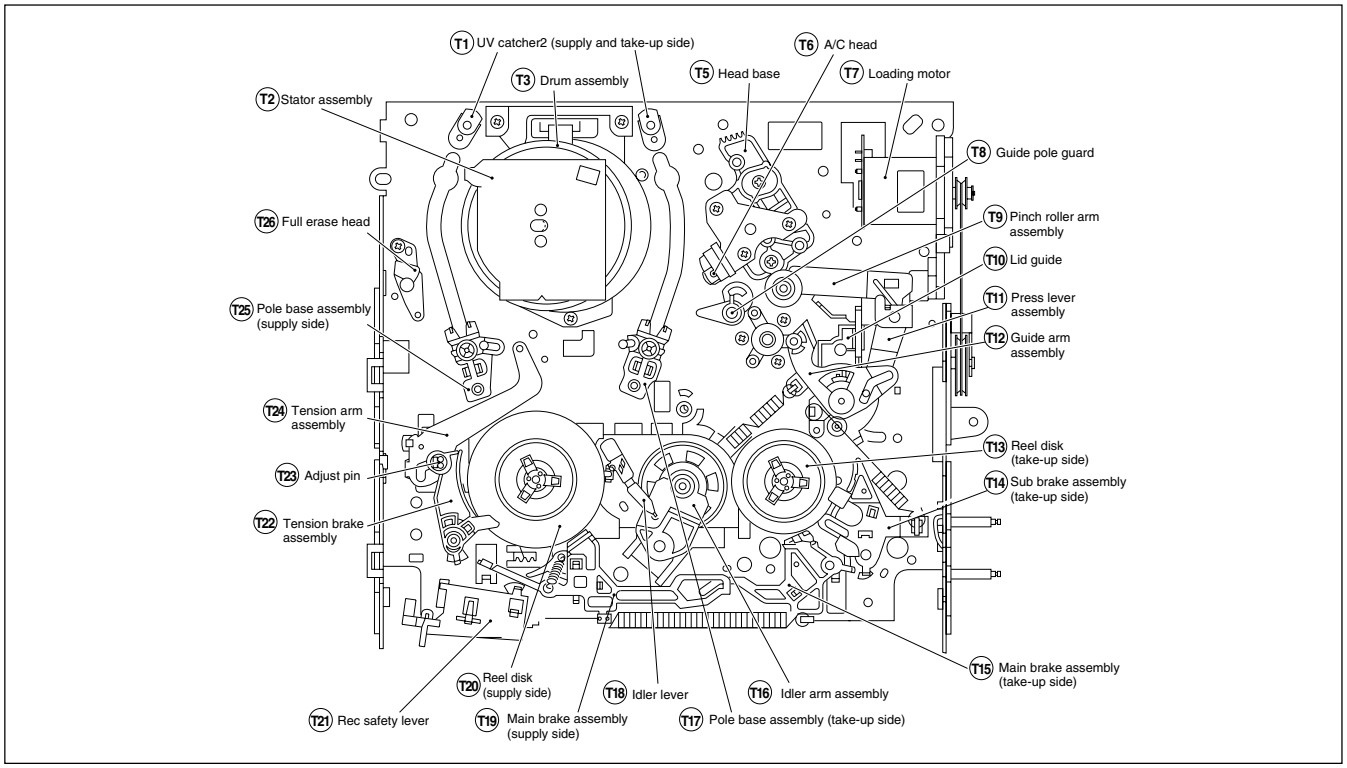

Fig. 2-1-5a Mechanism assembly top side

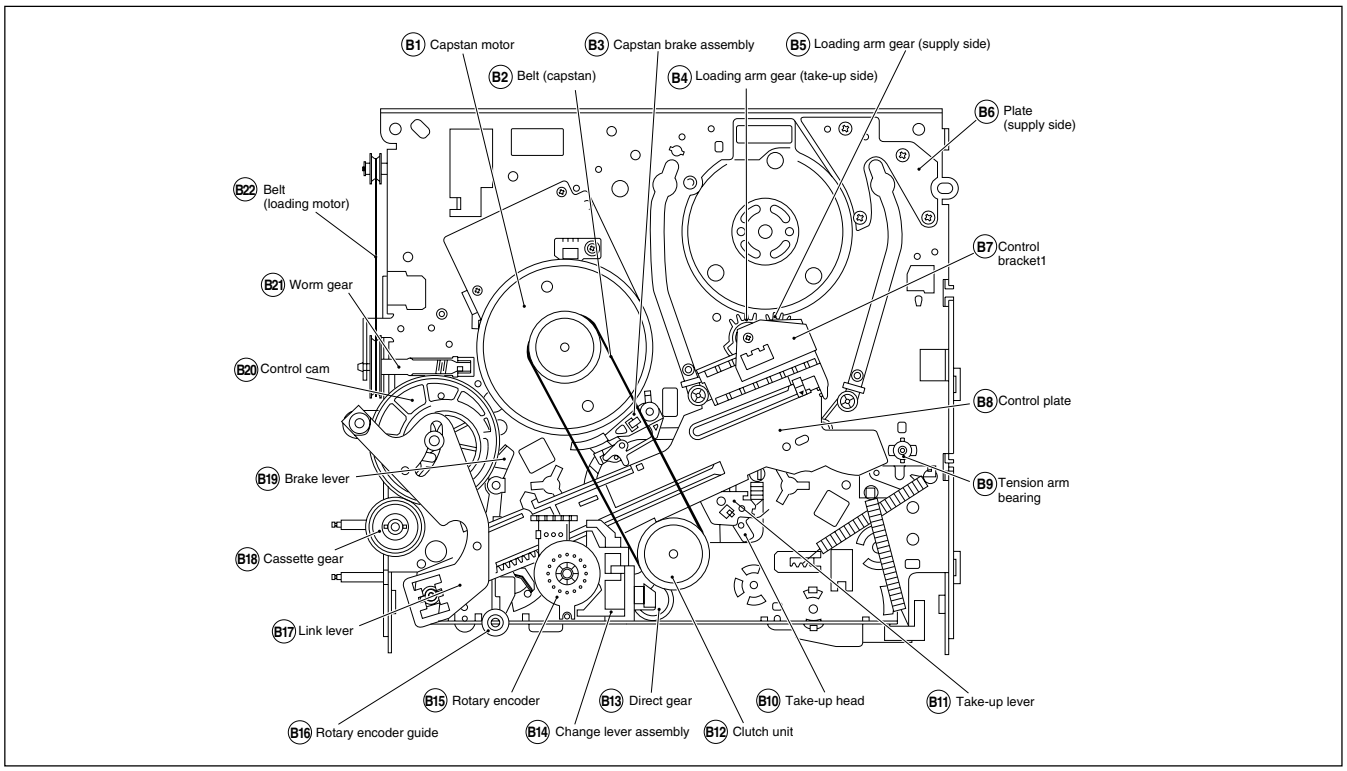

Fig. 2-1-5b Mechanism assembly bottom side

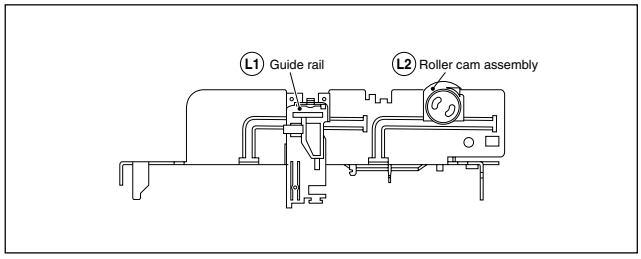

Fig. 2-1-5c Mechanism assembly left side

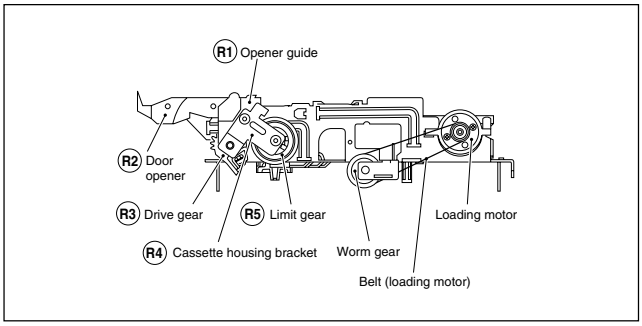

Fig. 2-1-5d Mechanism assembly right side

2. Cleaning

Regular cleaning of the transport system parts is desirable but practically impossible. So make it a rule to carry out cleaning of the tape transport system whenever the machine is serviced.

When the video head, tape guide and/or brush get soiled, the playback picture may appear inferior or at worst disappear, resulting in possible tape damage.

(1) When cleaning the upper drum (especially the video head), soak a piece of closely woven cloth or Kimu-wipe with alcohol and while holding the cloth onto the upper drum by the fingers, turn the upper drum counterclockwise.

Note:

- ***Absolutely avoid sweeping the upper drum vertically as this will cause damage to the video head.***

(2) To clean the parts of the tape transport system other than the upper drum, use a piece of closely woven cloth or a cotton swab soaked with alcohol.

(3) After cleaning, make sure that the cleaned parts are completely dry before using the video tape.

3. Lubrication

With no need for periodical lubrication, you have only to lubricate new parts after replacement. If any oil or grease on contact parts is soiled, wipe it off and newly lubricate the parts.

Note:

- ***See the "mechanism assembly" diagram of the parts list for the lubricating or greasing spots, and for the types of oil or grease to be used.***

4. Suggested servicing schedule for main components

The following table indicates the suggested period for such service measures as cleaning,lubrication and replacement. In practice, the indicated periods will vary widely according to environmental and usage conditions.However, the indicated components should be inspected when a set is brought for service and the maintenance work performed if necessary. Also note that rubber parts may deform in time,even if the set is not used.

System	Parts Name	Operation Hours	
		~1000H	~2000H
Tape transport	Upper drum assembly	★○	○
	A/C head	★○	★○
	Lower drum assembly	★	★○
	Pinch roller arm assembly	★	★
	Full erase head	★	★
	Tension arm assembly	★	★
	Capstan motor (Shaft)	★	★
	Guide arm assembly	★	★
Drive	Capstan motor		○
	Capstan brake assembly		○
	Main brake assembly		○
	Belt (Capstan)	○	○
	Belt (Loading motor)		○
	Loading motor		○
	Clutch unit		○
	Worm gear		○
	Control plate		○
Other	Brush	★○	★○
	Tension brake assembly	○	○
	Rotary encoder		○

★ : Cleaning

○ : Inspection or replacement if necessary

Table 2-1-5a

5. Disassembling procedure table

The following table indicates the order in which parts are removed for replacement. To replace parts, remove them in the order of 1 to 18 as shown in the table. To install them, reverse the removal sequence.

The symbols and numbers preceding the individual part names represent the numbers in the "Location of major mechanical parts" table. Also, the "T", "B", and "T/B" on the right of each part name shows that the particular part is removed from the front, from the back, and from both sides of the mechanism, respectively.

Symbols and numbers	Removal parts / (Reference items) Replacement parts	Front (T)/Back (B) of mechanism	Number of removal steps	Guide rail (L1)	Roller cam assembly (L2)	Cassette housing bracket (R4)	Opener guide (R1)	Relay gear (—)	Cassette holder assembly (—)	Drive gear (R3)	Drive arm (—)	Pinch roller arm assembly (T9)	Guide arm assembly (T12)	Press lever assembly (T11)	UV catcher2 (T1)	Rotary encoder (B15)	Clutch unit (B12)	Change lever assembly (B14)	Direct gear (B13)	Coupling gear (—)	Link lever (B17)	Worm gear (B21)	Control bracket1 (B7)	Control plate (B8)	Loading arm gear (supply side) (B5)	Loading arm gear (take-up side) (B4)	Take-up lever (B11)	Sub brake assembly (take-up side) (T14)	Main brake assembly (take-up side) (T15)	Reel disk (take-up side) (T13)	Tension brake assembly (T22)	Tension arm assembly (T24)	Idler lever (T18)	Brake lever (*1) (B19)
L1	2.2.3 Guide rail	T	1																															
L2	2.2.3 Roller cam assembly	T	1																															
R4	2.2.3 Cassette housing bracket	T	1																															
R1	2.2.3 Opener guide	T	2			1																												
R2	2.2.3 Door opener	T	3			1	2																											
—	2.2.3 Relay gear	T	3			1	2																											
R5	2.2.3 Limit gear	T	3			1	2																											
—	2.2.3 Cassette holder assembly	T	6	1	2	3	4	5																										
R3	2.2.3 Drive gear	T	4			1	2	3																										
—	2.2.3 Drive arm	T	8	1	2	3	4	5	6	7																								
T9	2.2.4 Pinch roller arm assembly	T	1																															
T12	2.2.5 Guide arm assembly	T	1																															
T11	2.2.5 Press lever assembly	T	3									1	2																					
T6	2.2.6 A/C head	T	1																															
T7	2.2.7 Loading motor	T	1																															
B1	2.2.8 Capstan motor	T/B	1																															
T1	2.2.9 UV catcher2	T	1																															
T17	2.2.9 Pole base assembly (take-up side)	T/B	2												1																			
T25	2.2.9 Pole base assembly (supply side)	T/B	2												1																			
B15	2.2.10 Rotary encoder	B	1																															
B12	2.2.11 Clutch unit	B	1																															
B14	2.2.12 Change lever assembly	B	3													1	2																	
B13	2.2.12 Direct gear	B	4													1	2	3																
—	2.2.12 Coupling gear	B	5													1	2	3	4															
—	2.2.12 Clutch gear	B	6													1	2	3	4	5														
B17	2.2.13 Link lever	B	1																															
B18	2.2.14 Cassette gear	B	2																		1													
B20	2.2.14 Control cam	B	2																		1													
B21	2.2.14 Worm gear	B	1																															
T10	- Lid guide	T/B	5									1	2	3								4												
B7	2.2.15 Control bracket1	B	1																															
B8	2.2.15 Control plate	B	6													1	2	3			4		5											
B5	2.2.16 Loading arm gear (supply side)	B	7													1	2	3			4		5	6										
B4	2.2.16 Loading arm gear (take-up side)	B	8													1	2	3			4		5	6	7									
—	2.2.16 Loading arm gear shaft	B	9													1	2	3			4		5	6	7	8								
B11	2.2.17 Take-up lever	T/B	7													1	2	3			4		5	6										
B10	2.2.17 Take-up head	T/B	8													1	2	3			4		5	6			7							
—	2.2.17 Control plate guide	T/B	8													1	2	3			4		5	6			7							
B3	2.2.18 Capstan brake assembly	T/B	7													1	2	3			4		5	6										
T14	2.2.19 Sub brake assembly(take-up side)	T/B	15	1	2	3	4	5	6	7	8					9	10	11			12		13	14										
T15	2.2.20 Main brake assembly(take-up side)	T/B	16	1	2	3	4	5	6	7	8					9	10	11			12		13	14				15						
T19	2.2.20 Main brake assembly(supply side)	T/B	9	1	2	3	4	5	6	7	8																							
T13	2.2.20 Reel disk (take-up side)	T/B	16	1	2	3	4	5	6	7	8					9	10	11			12		13	14				15						
T22	2.2.21 Tension brake assembly	T/B	9	1	2	3	4	5	6	7	8																							
T20	2.2.21 Reel disk (supply side)	T/B	10	1	2	3	4	5	6	7	8																				9			
T24	2.2.21 Tension arm assembly	T/B	10	1	2	3	4	5	6	7	8																				9			
B9	2.2.21 Tension arm bearing	T/B	10	1	2	3	4	5	6	7	8																				9			
T18	2.2.22 Idler lever	T/B	17	1	2	3	4	5	6	7	8					9	10	11			12		13	14							15	16		
T16	2.2.22 Idler arm assembly	T/B	18	1	2	3	4	5	6	7	8					9	10	11			12		13	14							15	16	17	
B19	- Brake lever (*1)	T/B	18	1	2	3	4	5	6	7	8					9	10	11			12		13	14				15	16	17				
B16	- Rotary encoder guide	T/B	19	1	2	3	4	5	6	7	8					9	10	11			12		13	14				15	16	17				18

Table 2-1-5b

Note:

- ***The parts with marked (∗) have different types of mechanisms (standard type or high-speed FF/REW type).***
  - ***∗1 : Uses the standard type mechanism only.***
  - ***∗2 : Uses the high-speed FF/REW type mechanism only.***

2.2 Replacement of major parts

2.2.1 Before starting disassembling (Phase matching between mechanical parts)

The mechanism of this unit is closely linked with the rotary encoder and system controller circuits.
Since the system controller detects the status of mechanical operation in response to phases of the rotary encoder (internal switch positions), the mechanism may not operate properly unless such parts as the rotary encoder, control plate, loading arm gear, control cam, cassette gear, limit gear, relay gear and drive gear are installed in their correct positions.
Especially, this model is not provided with any cassette housing assembly, so that cassette loading and unloading must be accomplished by operation of the cassette holder assembly. The latter is in turn driven by such parts as the drive gear, relay gear and limit gear. Exercise enough care, therefore, to have the phases of all this gear matching one another. (For information on phase matching of the mechanism, see the instructions on how to install individual parts.)
This unit is provided with a mechanism assembly mode. It is therefore necessary to enter this mode for assembling and disassembling procedures.
This mode is usually not in use, manually set it when it is required.

2.2.2 How to set the "Mechanism assembling mode"

Remove the mechanism assembly and place it bottom side up. (See SECTION 1 DISASSEMBLY.) Turn the worm gear toward the front so that the guide hole of the control cam is brought into alignment with the hole at the mechanism assembly chassis. This position renders the mechanism assembling mode operational. Make sure that the control plate is located in alignment with the mark E. (See Fig.2-2-2a.)

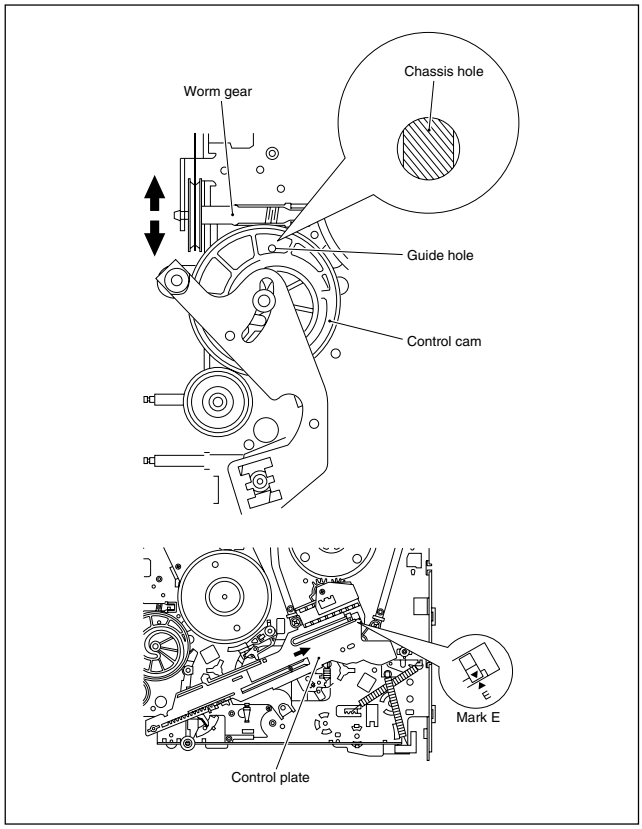

Fig. 2-2-2a

2.2.3 Cassette holder assembly

1. How to remove

(1) Remove the guide rail and roller cam assembly. (See Fig.2-2-3a.)
(3 lugs on the guide rail and one lug on the roller cam assembly)

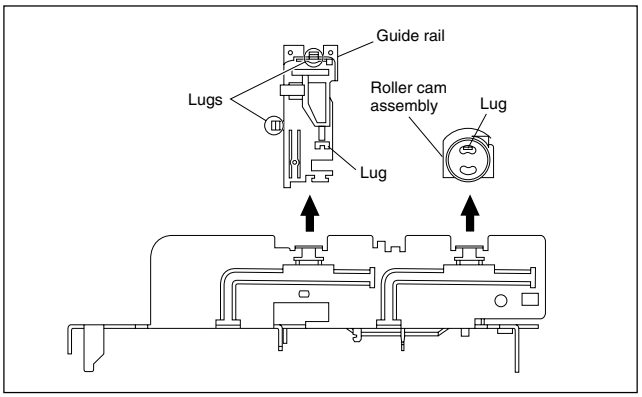

Fig. 2-2-3a

(2) Remove the two slit washers and remove the cassette housing bracket. (See Fig.2-2-3b.)
(3) Remove the opener guide, spring(A), door opener, relay gear and limit gear. (See Fig.2-2-3b.)

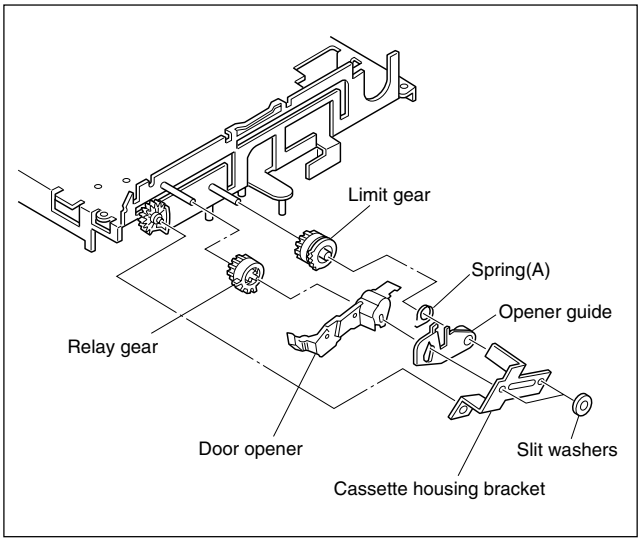

Fig. 2-2-3b

(4) While swinging the lock levers (R) and (L) of the cassette holder assembly toward the front, slide the cassette holder assembly until its legs come to where the guide rail and the roller cam assembly have been removed (so that the drive arm is upright). (See Fig.2-2-3c.)

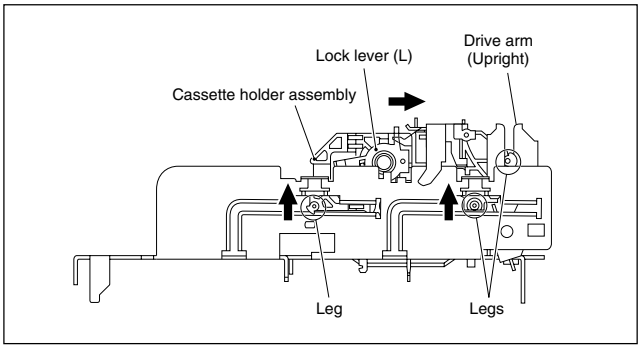

Fig. 2-2-3c

(5) While holding the left side of the cassette holder, lift the cassette holder assembly so that the three legs on the left side are all released. Then pull the legs (A) and (B) on the right side out of the rail and also pull up the leg(C). (See Fig.2-2-3d and Fig.2-2-3e.)
(6) Draw out the drive gear, and remove the drive arm.

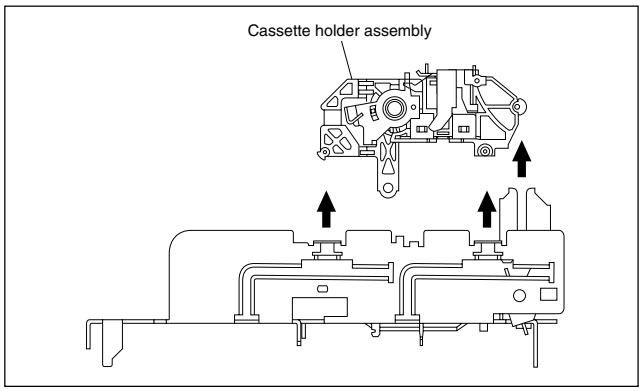

Fig. 2-2-3d

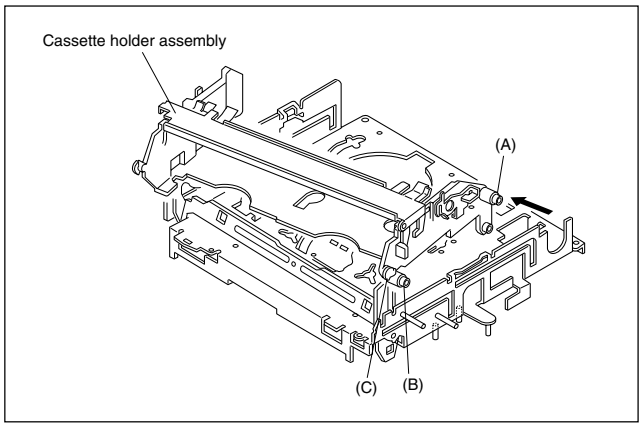

Fig. 2-2-3e

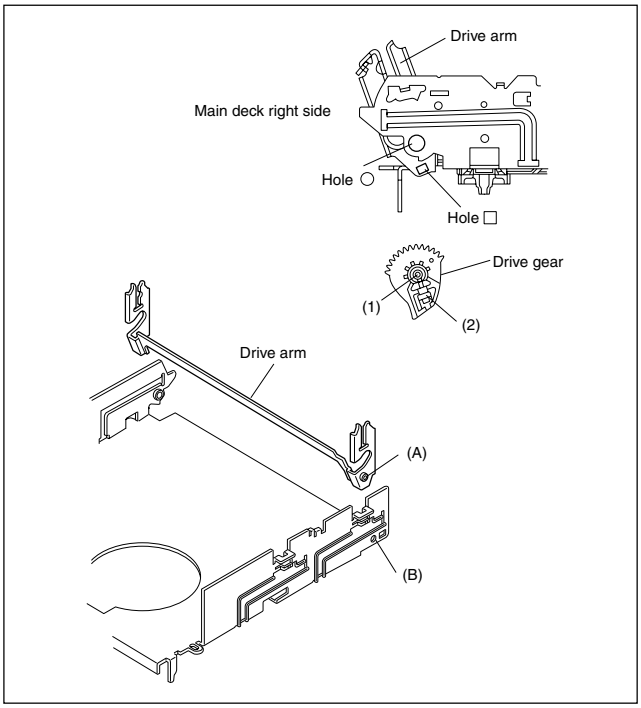

Fig. 2-2-3f

2. How to install (Phase matching)

(1) Insert the section (A) of the drive arm into the section (B) of the main deck.
(2) Insert the section (1) of the drive gear into the round hole, and the section (2) into the square hole on the drive arm. (See Fig.2-2-3f.)
(3) Hold the drive arm upright and fit the leg (C) on the right side of the cassette holder assembly into the groove. (See Fig.2-2-3g.)
(4) While swinging the lock lever (R) of the cassette holder assembly toward the front, put the legs (A) and (B) into the rail. (See Fig.2-2-3g.)
(5) Drop the three legs on the left side of the cassette holder assembly into the groove at one time. (See Fig.2-2-3h.)
(6) Slide the whole cassette holder assembly toward the front to bring it to the eject end position.
(7) Install the limit gear so that the notch on the outer circumference of the limit gear is brought into alignment with the guide hole on the main deck. (See Fig.2-2-3i.)
(8) Install so that the notch on the periphery of the relay gear is aligned with the notch of the main deck and that hole A of the relay gear is aligned with the hole A of the limit gear and that hole B of the relay gear is aligned with the hole B of the drive gear. (See Fig.2-2-3i.)
(9) Install the door opener, opener guide, spring(A) and cassette housing bracket and fasten the two slit washers.

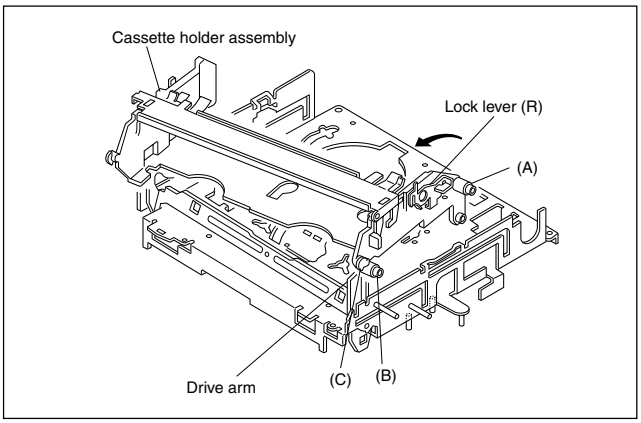

Fig. 2-2-3g

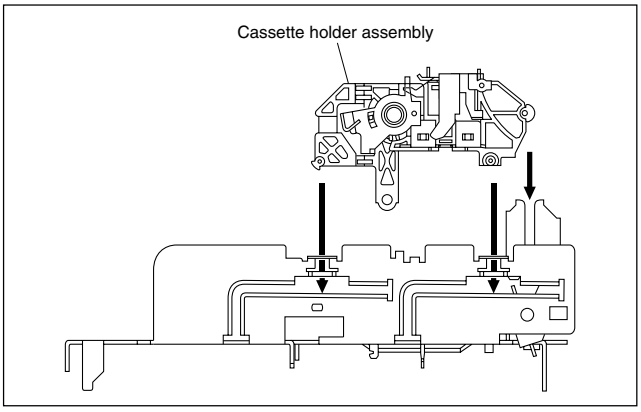

Fig. 2-2-3h

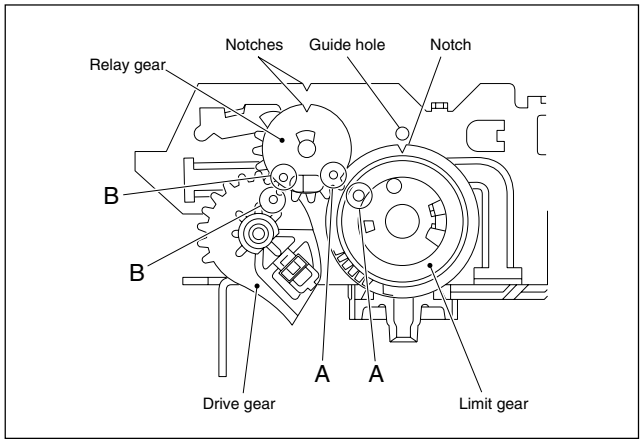

Fig. 2-2-3i

2.2.4 Pinch roller arm assembly

1. How to remove

(1) Remove the spring from the hook of the press lever assembly.
(2) Remove the slit washer and remove the pinch roller seat 2. (See Fig.2-2-4a.)
(3) Remove the pinch roller arm assembly by pulling it up.

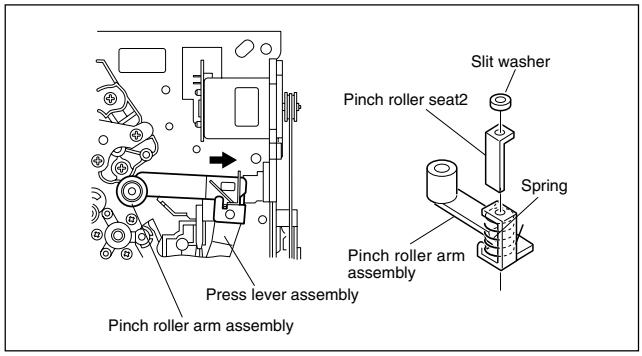

Fig. 2-2-4a

2.2.5 Guide arm assembly and press lever assembly

1. How to remove

(1) Remove the spring and expand the lug of the lid guide in the arrow-indicated direction. Then remove the guide arm assembly by pulling it up.
(2) Remove the press lever assembly by pulling it up. (See Fig.2-2-5a.)

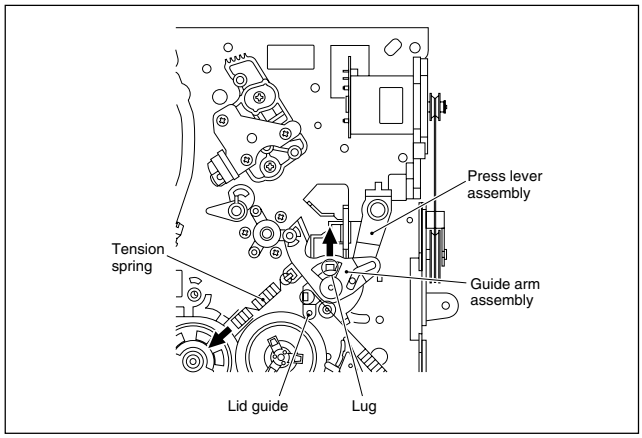

Fig. 2-2-5a

2.2.6 A/C head

1. How to remove

(1) Remove the two screws (A) and remove the A/C head together with the head base.
(2) When replacing only the A/C head, remove the three screws (B) while controlling the compression spring.

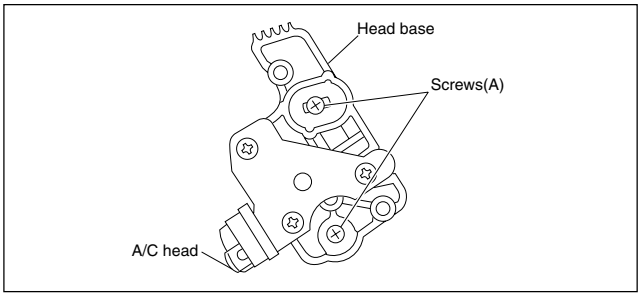

Fig. 2-2-6a

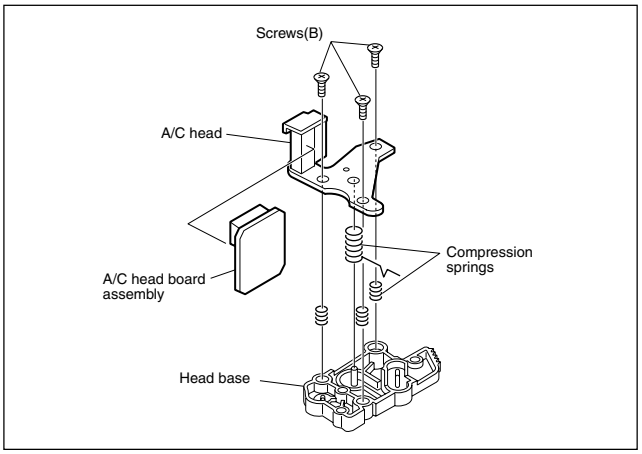

Fig. 2-2-6b

2. How to install

(1) To make the post-installation adjustment easier, set the temporary level as indicated in Fig.2-2-6c. Also make sure that the screw center (centre) is brought into alignment with the center (centre) position of the slot.

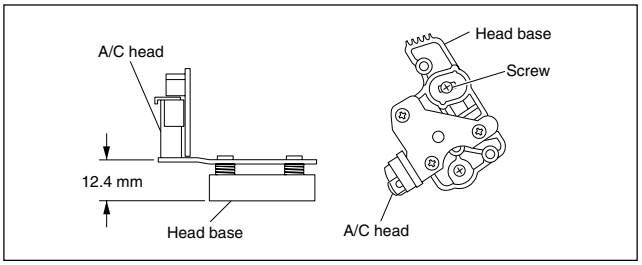

Fig. 2-2-6c

2.2.7 Loading motor

1. How to remove

(1) Remove the belt wound around the worm gear.
(2) Open the two lugs of the motor guide and remove the loading motor, loading motor board assembly and motor guide altogether by pulling them up.
(3) When replacing the loading motor board assembly, take care with the orientation of the loading motor. (Install so that the loading motor label faces upward.)
(4) When the motor pulley has been replaced, choose the fitting dimension as indicated in Fig.2-2-7a.

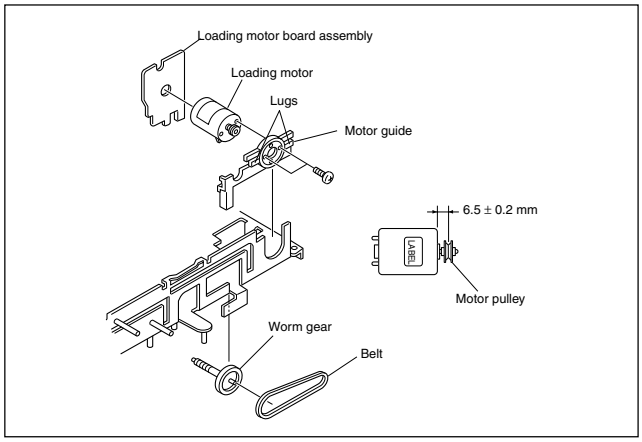

Fig. 2-2-7a

2.2.8 Capstan motor

1. How to remove

(1) Remove the belt (capstan) on the mechanism assembly back side.

(2) Remove the three screws (A) and remove the capstan motor.

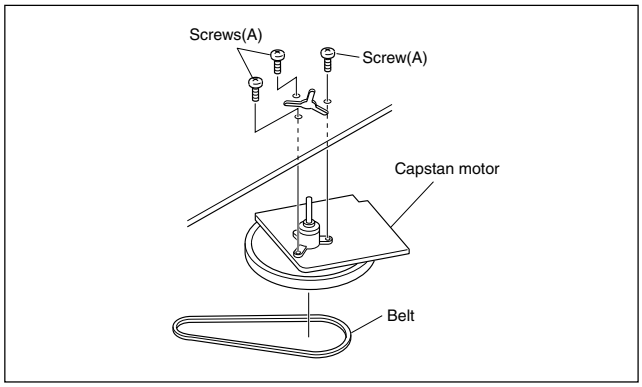

Fig. 2-2-8a

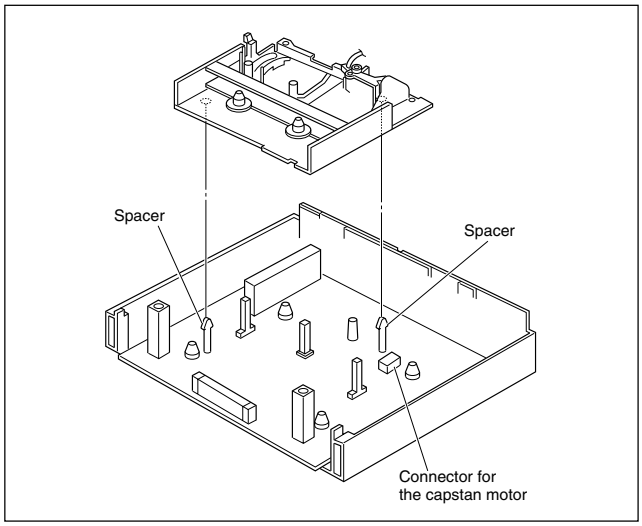

Fig. 2-2-8b

2. How to install (Centering the mounting position)

When the capstan motor has once been removed and then reinstalled out of the initial correct position in the rotational direction, the capstan motor current may be unstable during operation in high or low temperatures. This may result in greater Wow & Flutter and occasionally in power breakdown because of current over - load. Install the capstan motor while following the procedure given below.

(The capstan motor is centrally located when the unit is shipped from the factory.)

(1) Provisionally tighten the three screws (A) securing the capstan motor.

(2) Install the mechanism assembly to which the capstan motor is provisionally fastened on the bottom chassis which incorporates the Main board assembly. (No need to tighten the screws for mounting the mechanism.)
Make sure that all the connectors for the mechanism assembly and the Main board assembly are correctly installed as indicated in Fig. 2-2-8b.

(3) Making sure that the connector for the capstan motor is correctly mounted, and securely tighten the three screws (A).

Note:

- ***When the capstan motor has been replaced with a new one, perform recording in the EP(or LP) mode for at least 2 minutes at normal temperatures immediately before starting the FF/REW or SEARCH operations (Aging).***

2.2.9 Pole base assembly (supply or take-up side)

1. How to remove

(1) Remove the UV catcher 2 on the removal side by loosening the screw (A).

(2) Remove the pole base assembly on the supply side from the mechanism assembly by loosening the screw (B) on the mechanism assembly back side and sliding the pole base assembly toward the UV catcher 2.

(3) As for the pole base assembly on the take-up side, turn the pulley of the loading motor to lower the cassette holder because the screw (B) is hidden under the control plate. (See the “Procedures for Lowering the Cassette holder assembly” of 1.3 DISASSEMBLY/ASSEMBLY METHOD.) Further turn the motor pulley to move the cassette holder until the screw (B) is no longer under the control plate (in the half-loading position). Then remove it as done for the supply side by removing the screw (B).

Note:

- ***After reinstalling the Pole base assembly and the UV catcher2, be sure to perform compatibility adjustment.***

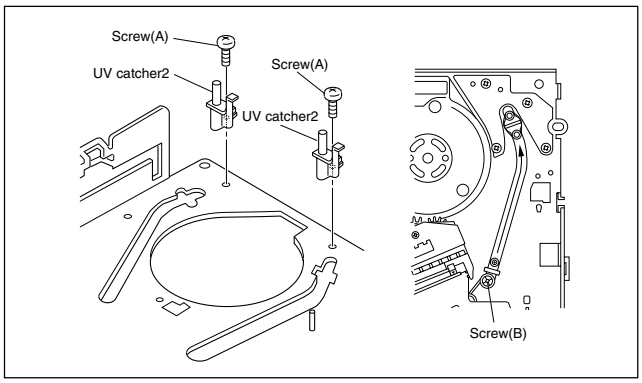

Fig. 2-2-9a

2.2.10 Rotary encoder

1. How to remove

(1) Remove the screw (A) and remove the rotary encoder by pulling it up. (See Fig. 2-2-10a.)

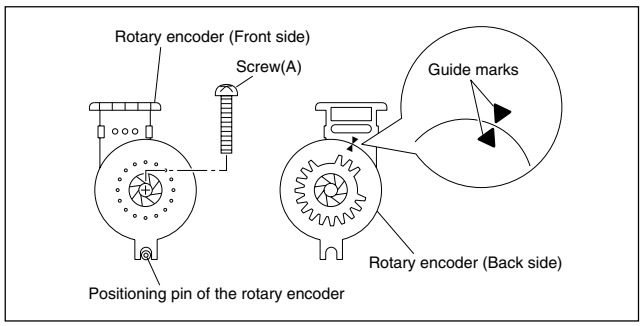

Fig. 2-2-10a

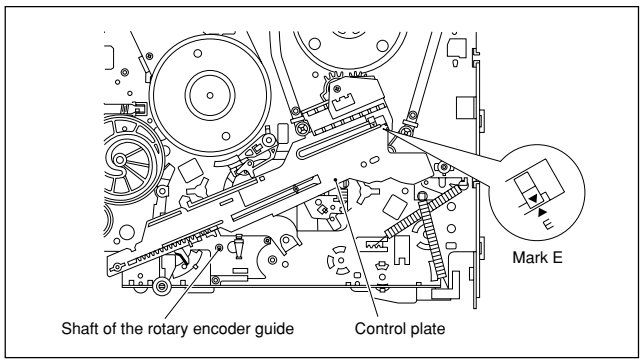

Fig. 2-2-10b

2. How to install (Phase matching)

(1) Make sure that the mark E of the control plate is in alignment with the mark ▼ of the loading arm gear shaft and bring the guide marks on the rotary encoder into alignment as indicated in Fig.2-2-10a. (See Fig. 2-2-10a and Fig. 2-2-10b.)

(2) Turn over the rotary encoder with its guide marks kept in alignment and install it by fitting on the shaft of the rotary encoder guide and the positioning pin.

(3) Tighten the screw (A) to complete the installation.

2.2.11 Clutch unit

(1) Remove the belt wound around the capstan motor and the clutch unit.

(2) Remove the slit washer and remove the clutch unit.

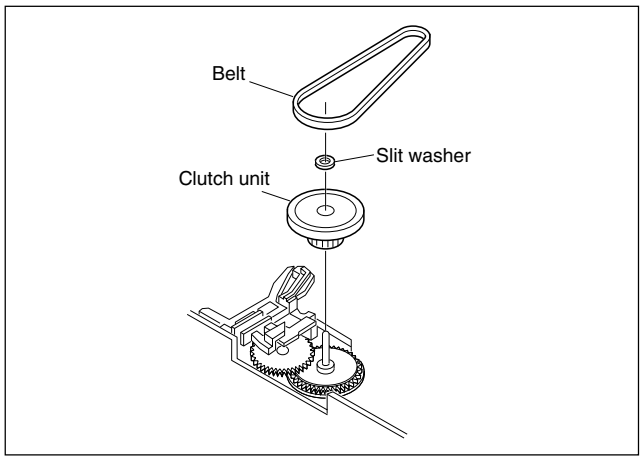

Fig. 2-2-11a

2.2.12 Change lever assembly, direct gear, clutch gear and coupling gear

1. How to remove

(1) Release the two lugs of the rotary encoder guide in the arrow-indicated direction and remove the change lever assembly.

(2) Remove the slit washer retaining the direct gear and remove the latter.
Take care so as not to lose the washer and spring. (See Fig.2-2-12a.)

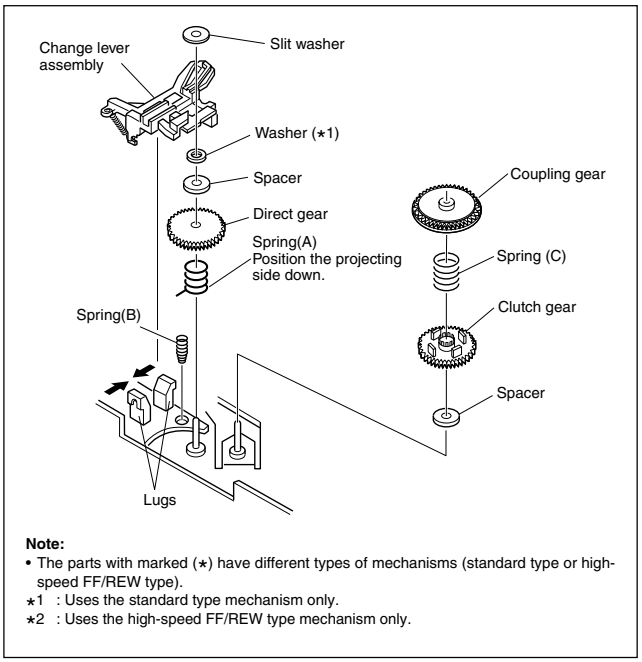

Fig. 2-2-12a

2. How to install

(1) Install the clutch gear, spring (A), spring (C), direct gear, spacer and others to the individual shafts of the main deck, and finally the slit washer. (See Fig.2-2-12a.)

(2) Let the spring (B) drops into the rotary encoder guide hole and install the change lever assembly.(Take care not to mistake a direction of the spring.) The point is to slightly lift the coupling gear and catch it from the both sides with the assembly. (See Fig.2-2-12b.)

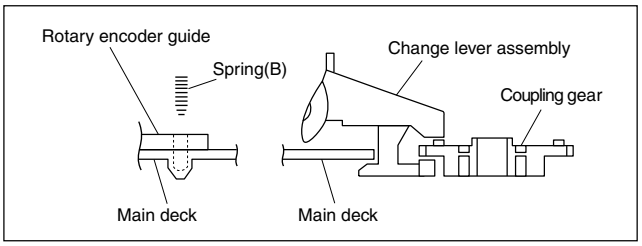

Fig. 2-2-12b

2.2.13 Link lever

1. How to remove

(1) Remove the two slit washers.
(2) Remove the link lever by lifting it from the shaft retained by the slit washers. Then swing the link lever counterclockwise and remove it from the locking section of the control plate.

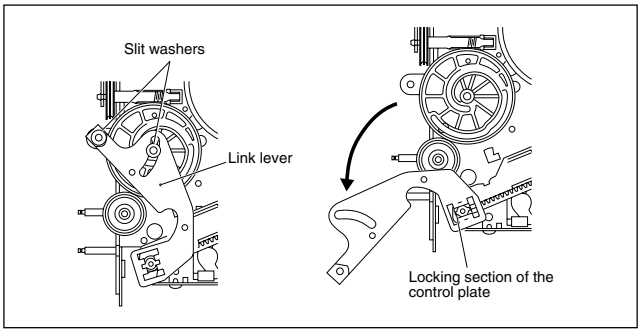

Fig. 2-2-13a

2. How to install (Phase matching)

(1) Slide the control plate so that its mark E is aligned with the mark ▼ on the loading arm gear shaft. (See Fig.2-2-13b.)
(2) Rotate the worm gear until the guide hole of the control cam is aligned exactly with the guide hole of the main deck. (See Fig.2-2-13c.)
(3) Insert the link lever into the locking section of the control plate. (See Fig.2-2-13a.)
(4) Rotate the link lever clockwise so that it is installed on the shafts in the center (centre) and on the left of the control cam.
(5) Fasten the slit washers at these two points.

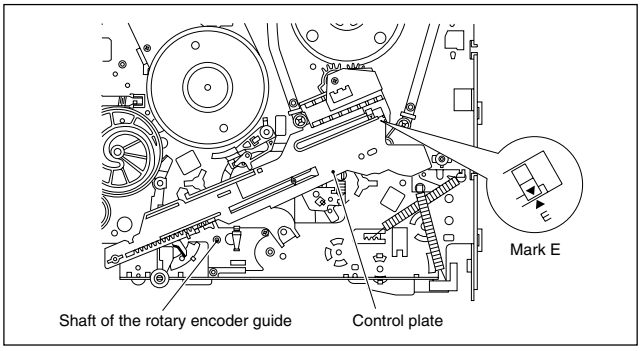

Fig. 2-2-13b

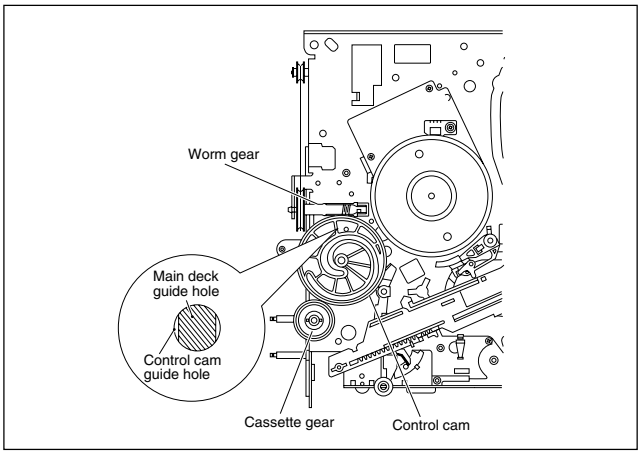

Fig. 2-2-13c

2.2.14 Cassette gear, control cam and worm gear

1. How to remove

(1) Remove the control cam by lifting it.
(2) Open the two lugs of the cassette gear outward and pull the latter off.
(3) Remove the belt wound around the worm gear and the loading motor.
(4) Open the lug of the lid guide outward and remove the worm gear.

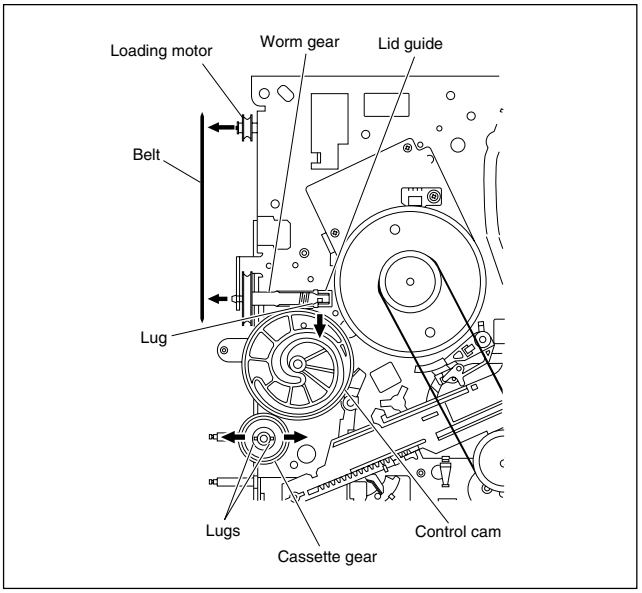

Fig. 2-2-14a

2.2.15 Control plate

1. How to remove

(1) Remove the screw (A) retaining the control bracket 1 and remove the latter.
(2) Slide the control plate as indicated by the arrow and remove the control plate. (See Fig.2-2-15a.)

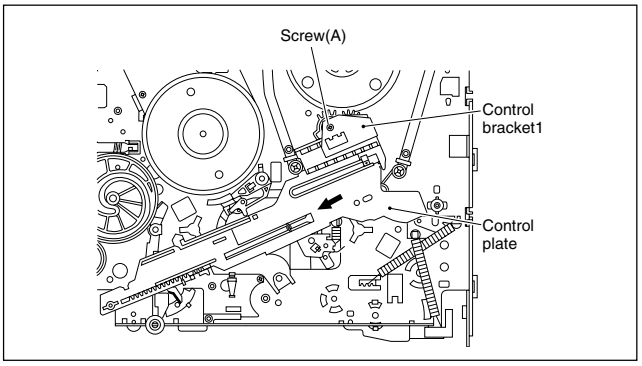

Fig. 2-2-15a

2. How to install (Phase matching)

(1) Adjust the position of the idler arm assembly pin as indicated in Fig.2-2-15b (to the left of center (centre) of the R section).
(2) Bring the guide hole of the take-up lever into alignment with the hole at the control plate guide and fix the position by inserting a 1.5 mm hexagonal wrench.

(3) Install the control plate so that the section A of the loading arm gear shaft fits into the hole (A) of the control plate, the section B of the control plate guide into the hole (B), and the control plate comes under the section C of the rotary encoder guide and the section D of the loading arm gear shaft while press-fit the pole base assmebly (supply side) as indicated by the arrow. It is important that the tension arm assembly shaft is positioned closer toward you than the control plate. (See Fig.2-2-15c.)
(4) Make sure that the mark E of the control plate is in alignment with the mark ▼ of the loading arm gear shaft. (See Fig.2-2-15c.)
(5) Pull off the hexagonal wrench for positioning.

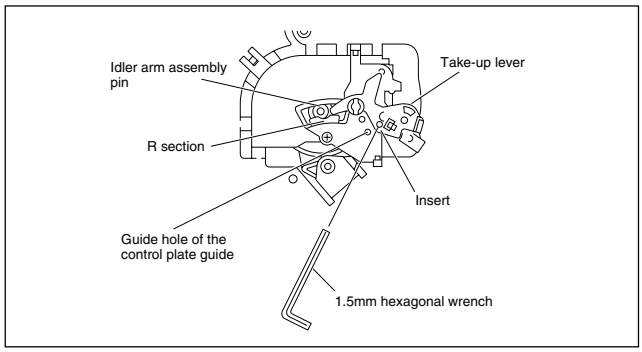

Fig. 2-2-15b

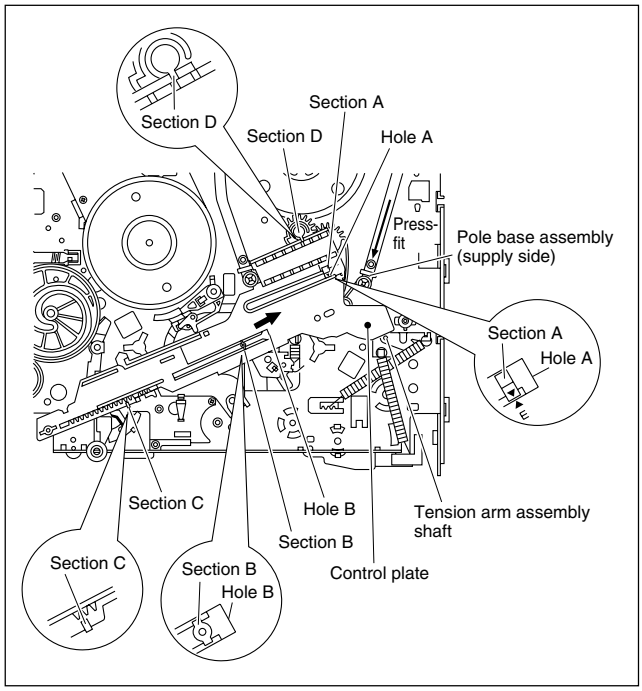

Fig. 2-2-15c

2.2.16 Loading arm gear (supply or take-up side) and loading arm gear shaft

1. How to remove

(1) Remove the loading arm gear (supply side) by loosening the screw (A). (See Fig. 2-2-16a.)
(2) Remove the screw (B) and remove the torsion arm from the pole base assembly (take-up side). (See Fig.2-2-16a.)
(3) Turn the loading arm gear (take-up side) clockwise so that the notch of the loading arm gear (take-up side) is in alignment with the projection of the loading arm gear shaft and lift it.
Likewise, turn the loading arm counterclockwise so that the notch is in alignment with the projection and remove the loading arm gear (take-up side). (See Fig.2-2-16a and Fig. 2-2-16b.)
(4) When removing the loading arm gear shaft, be sure of first removing the screw retaining the drum assembly (on the back side of the loading arm gear shaft). Then remove the screw (C) and remove the loading arm gear shaft by sliding it.

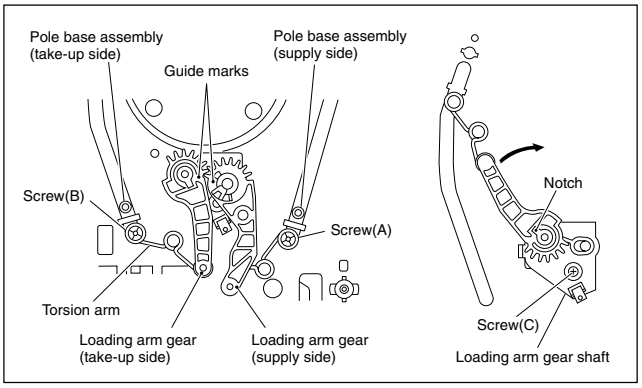

Fig. 2-2-16a

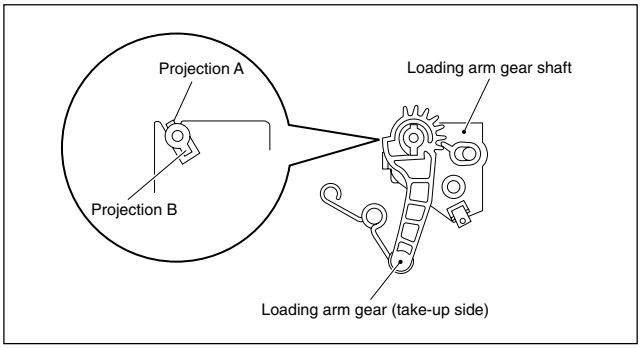

Fig. 2-2-16b

2. How to install

(1) Align the notch of the loading arm gear (take-up side) to the projection B of the loading arm gear shaft and slip it over. Then rotate it clockwise for alignment with the projection A and slip it down to the bottom. (See Fig.2-2-16b.)
(2) Then turn the loading arm gear (take-up side) counterclockwise. Hang the torsion arm on the pole base assembly (take-up side) and tighten the screw (B).
(3) Install the loading arm gear (supply side) so that the guide mark of the loading arm gear (take-up side) is in alignment with the guide mark of the loading arm gear (supply side). Then hang the torsion arm on the pole base assembly (supply side) and tighten the screw (A). (See Fig.2-2-16a.)

2.2.17 Take-up lever, take-up head and control plate guide

(1) Remove the spring of the take-up lever from the main deck.
(2) Remove the lug (A) of the take-up lever from the main deck and pull out the take-up lever and the take-up head together.
(3) Remove the screw (A).
(4) Align the idler arm assembly pin in the center (centre) of the R section of the control plate guide, remove the control plate guide lugs (B) and (C) from the main deck, and remove the control plate guide.

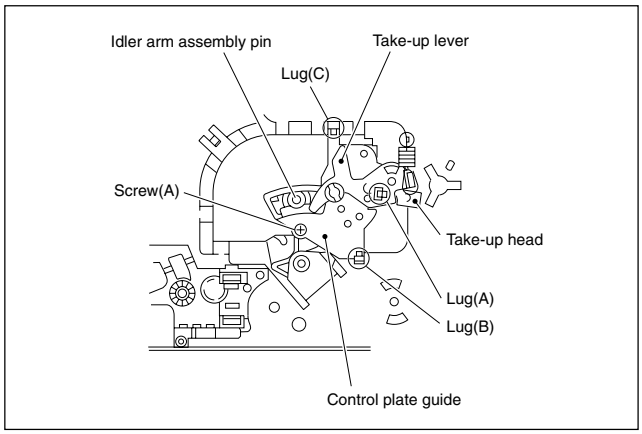

Fig. 2-2-17a

2.2.18 Capstan brake assembly

1. How to remove

(1) Move the lug (A) of the capstan brake assembly in the arrow-indicated direction so that it comes into alignment with the notch of the main deck. (See Fig. 2-2-18a.)
(2) Remove the lug (B) of the capstan brake assembly from the main deck and remove the capstan brake assembly.

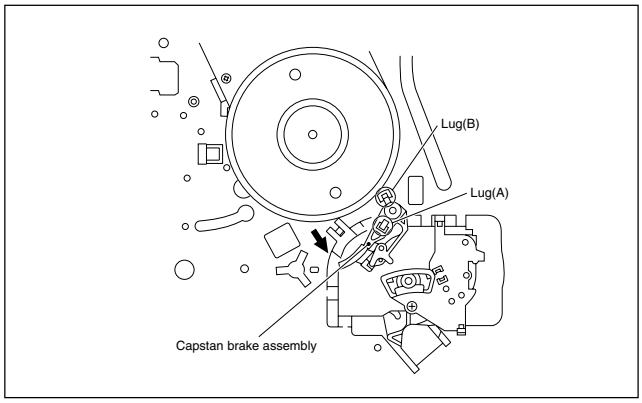

Fig. 2-2-18a

2.2.19 Sub brake assembly (take-up side)

1. How to remove

(1) Remove the spring attached to the lid guide and sub brake assembly (take-up side).
(2) Bring the lug (A) of the sub brake assembly (take-up side) into alignment with the notch of the main deck.
(3) Remove the lugs (B) and (C) of the sub brake assembly (take-up side) from the main deck and remove the sub brake assembly (take-up side).

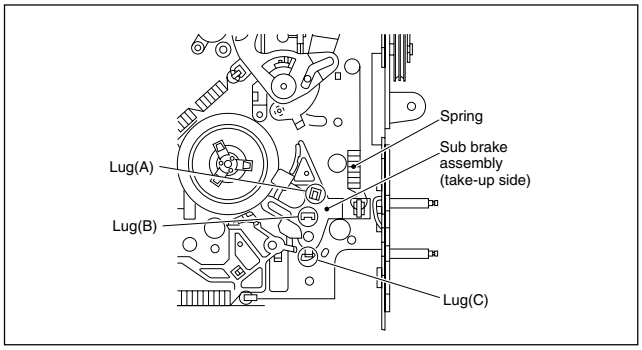

Fig. 2-2-19a

2.2.20 Main brake assembly (take-up side), reel disk (take-up side) and main brake assembly (supply side)

1. How to remove

(1) Move the main brake assembly (take-up side) in the arrow-indicated direction and remove the reel disk (take-up side).
(2) Remove the spring attached to the main brake assembly.
(3) Remove the lug (A) of the main brake assembly (take-up side) and pull out the lug (B) after bringing it into alignment with the main deck notch.
(4) Remove the lugs (C), (D) and (E) of the main brake assembly (supply side) from the main deck and pull them off. (See Fig.2-2-20a.)
(5) When installing the main brake assembly (take-up side), slide the brake lever in the direction as indicated by the arrow to prevent it from hitting the projection of the main brake assembly (take-up side). (See Fig.2-2-20b.)

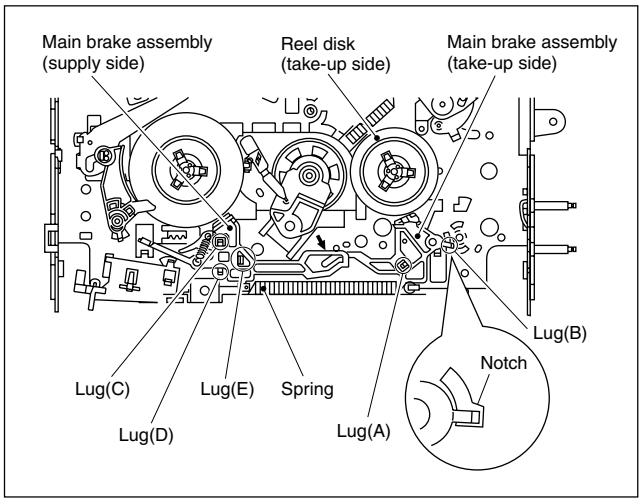

Fig. 2-2-20a

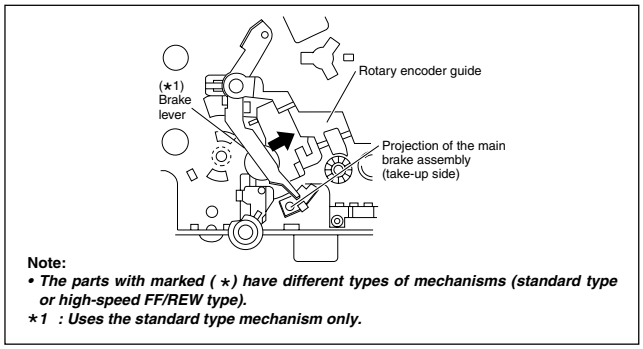

Fig. 2-2-20b

2.2.21 Tension brake assembly, reel disk (supply side) and tension arm assembly

1. How to remove

(1) Remove the three lugs of the tension brake assembly from the main deck and pull them off.
(2) Remove the reel disk (supply side) by loosening in the arrow-indicated direction the main brake assembly (supply side).
(3) Remove the tension spring on the back of the main deck. Then release the lug of the tension arm bearing in the arrow-indicated direction and draw out the tension arm assembly. (See Fig. 2-2-21a.)

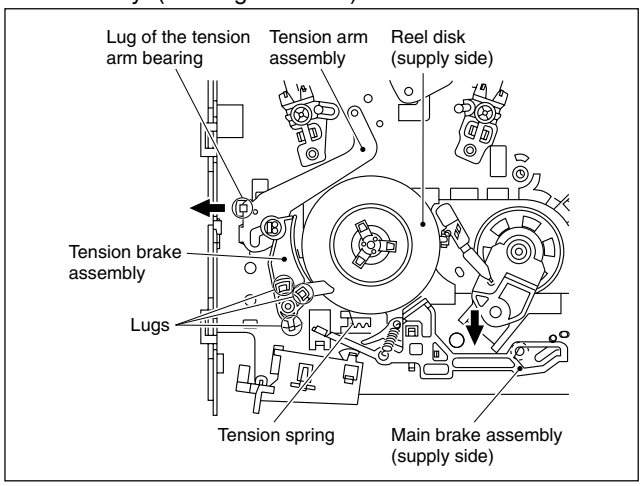

Fig. 2-2-21a

2.2.22 Idler lever, idler arm assembly

1. How to remove

(1) Remove the lug of the idler lever from the main deck and remove the hook fitted in the idler arm assembly hole by lifting it.
(2) Remove the slit washer and pull out the idler arm assembly.

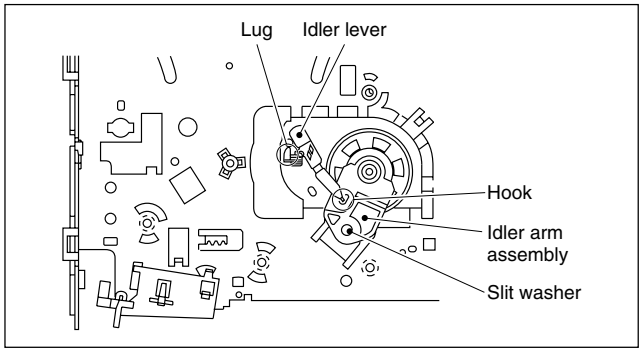

Fig. 2-2-22a

2.2.23 Stator assembly

(1) Remove the flat cable.
(2) Remove the two screws (A), (B) and remove the lug wire.
(3) Remove the stator assembly by lifting in the arrow-indicated direction. (Take care that the brush spring does not jump out.)

Notes:

- ***Be careful not to lose the brush and spring.***
- ***There are some models that do not use the lug wire. Refer to the parts list for these models.***
- ***When tightening the screw (B), place the caulked part of the lug terminal near to the shaft of the drum and then tighten it.***
- ***After installation, be sure to perform the switching point adjustment according to the electrical adjustment procedure.***

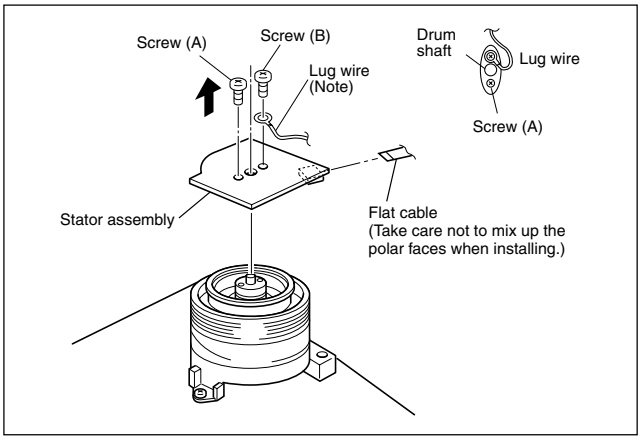

Fig. 2-2-23a

2.2.24 Rotor assembly

1. How to remove

(1) Remove the stator assembly.
(2) Remove the two screws (B) and remove the rotor assembly.

2. How to install

(1) Match the phases of the upper drum assembly and the rotor assembly as indicated in Fig.2-2-24a.
(2) Place the upper drum assembly hole (a) over the rotor assembly holes (b) (with three holes to be aligned) and tighten the two screws (B). (See Fig.2-2-24a.)

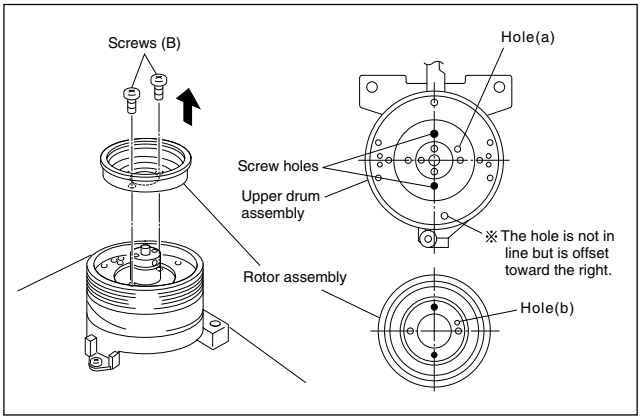

Fig. 2-2-24a

2.2.25 Upper drum assembly

Notes:

- ***To replace the upper drum assembly only may not be possible with some models. For upper drum assembly replacement, refer to the parts list. (When the parts number of the upper drum assembly is not listed on the parts list, then this cannot be replaced.)***
- ***When replacement is required, control the up- down movement of the brush. Never apply grease.***
- ***When replacing the upper drum assembly, replace it the together with the washer.***

1. How to remove

(1) Remove the stator assembly and rotor assembly.
(2) Loosen the screw of the collar assembly using a 1.5 mm hexagonal wrench and remove the collar assembly. Also remove the brush, spring and cap at one time.
(3) Remove the upper drum assembly and remove the washer using tweezers.

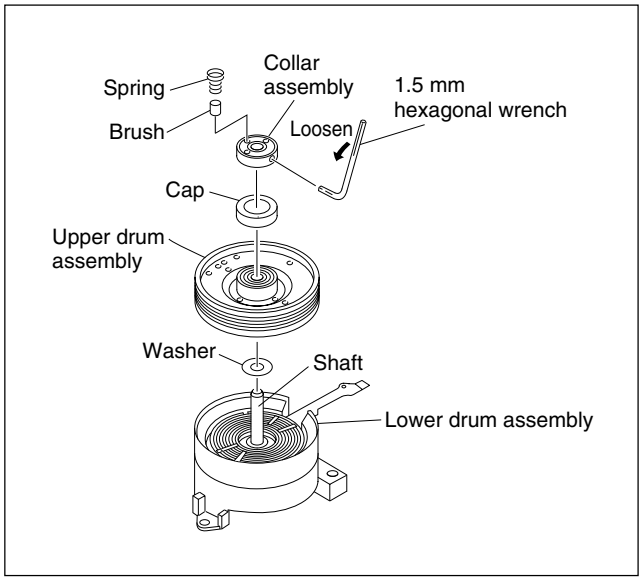

Fig. 2-2-25a

2. How to install

(1) Clean the coil parts of the lower drum assembly and the newly installed upper drum assembly with an air brush in advance. (See Fig.2-2-25b.)
(2) Install a new washer and upper drum assembly on the drum shaft. (See Fig.2-2-25a.)
(3) Install the cap to the upper drum assembly.
(4) Position the collar assembly as indicated in Fig.2-2-25c while controlling its up- down movement.
(5) Secure the collar assembly in position with a hexagonal wrench while pressing its top with the fingers.
(6) After installation, gently turn the upper drum assembly with your hand to make sure that it turns normally. Then install the brush and the spring.
(7) Install the rotor assembly and stator assembly according to Fig 2-2-23a and 2-2-24a.
(8) When installation is complete, clean the upper drum assembly and lower drum assembly and carry out the following adjustments.
   - PB switching point adjustment
   - Slow tracking adjustment
   - Compatibility adjustment (Be sure to check for compatibility for the EP (or LP) mode.)

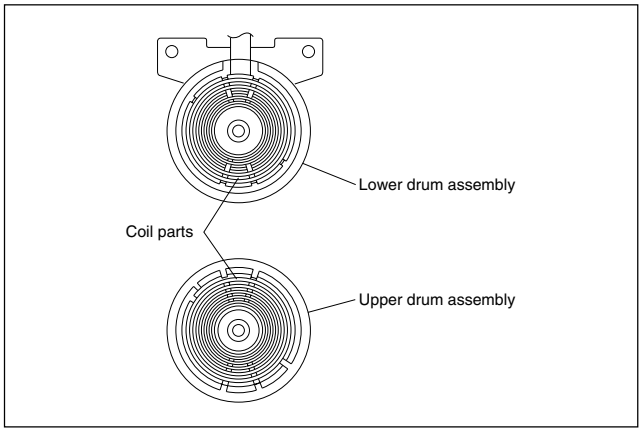

Fig. 2-2-25b

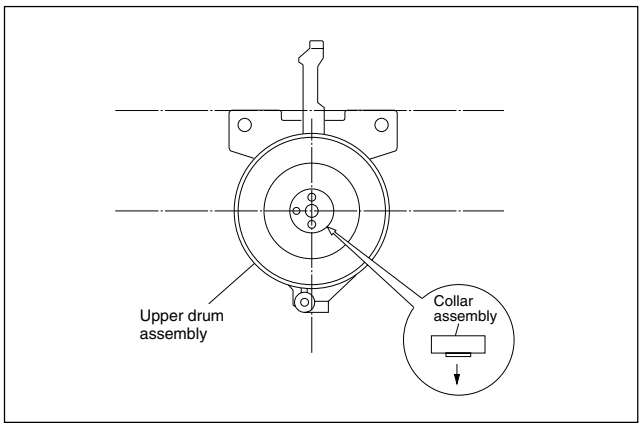

Fig. 2-2-25c

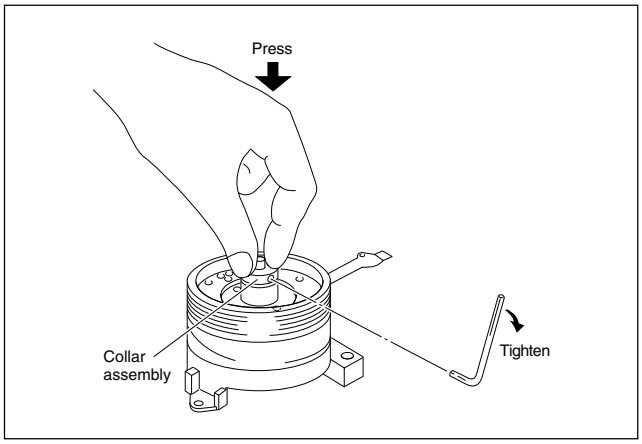

Fig. 2-2-25d

2.3 Compatibility adjustment

Notes:

- ***Although compatibility adjustment is very important, it is not necessary to perform this as part of the normal servicing work. It will be required when you have replaced the A/C head, drum assembly or any part of the tape transport system.***
- ***To avoid any damage to the alignment tape while performing the compatibility adjustment, get a separate cassette tape (for recording and play back) ready to be used for checking the initial tape running behavior.***
- ***Unless otherwise specified, all measuring points and adjustment parts are located on the Main board.***
- ***When using the Jig RCU, it is required to set the VCR to the Jig RCU mode (the mode in which codes from the Jig RCU can be received). (See SECTION 1 DISASSEMBLY.)***

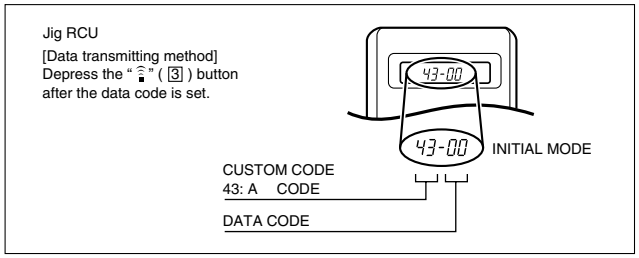

Fig. 2-3a Jig RCU [PTU94023B]

2.3.1 FM waveform linearity

Signal	(A1) (A2)	• Alignment tape(SP, stairstep, PAL) [MHPE] • Alignment tape(LP, stairstep, PAL) [MHPE-L]
Mode	(B)	• PB
Equipment	(C)	• Oscilloscope
Measuring point	(D)	• TP106 (PB. FM)
External trigger	(E)	• TP111 (D.FF)
Adjustment part	(F)	• Guide roller [Mechanism assembly]
Specified value	(G)	• Flat V.PB FM waveform
Adjustment tool	(H)	• Roller driver [PTU94002]

(1) Play back the alignment tape (A1).
(2) Apply the external trigger signal to D.FF (E), to observe the V.PB FM waveform at the measuring point (D).
(3) Set the VCR to the manual tracking mode.
(4) Make sure that there is no significant level drop of the V.PB FM waveform caused by the tracking operation, with its generally parallel and linear variation ensured. Perform the following adjustments when required. (See Fig. 2-3-1a.)
(5) Reduce the V.PB FM waveform by the tracking operation. If a drop in level is found on the left side, turn the guide roller of the pole base assembly (supply side) with the roller driver to make the V.PB FM waveform linear.
If a drop in level is on the right side, likewise turn the guide roller of the pole base assembly (take-up side) with the roller driver to make it linear. (See Fig. 2-3-1c.)
(6) Make sure that the V.PB FM waveform varies in parallel and linearly with the tracking operation again. When required, perform fine-adjustment of the guide roller of the pole base assembly (supply or take-up side).
(7) Unload the cassette tape once, play back the alignment tape (A1) again and confirm the V.PB FM waveform.
(8) After adjustment, confirm that the tape wrinkling does not occur at the roller upper or lower limits. (See Fig. 2-3-1d.)

[Perform adjustment step (9) only for the models equipped with SP mode and EP (or LP) mode.]

(9) Repeat steps (1) to (8) by using the alignment tape (A2).

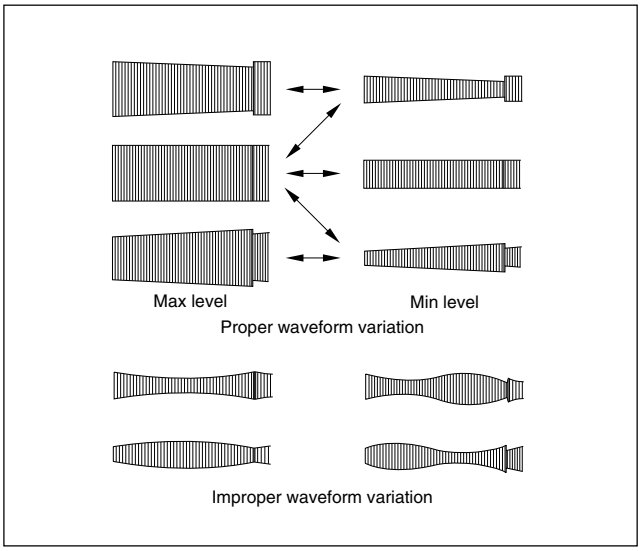

Fig. 2-3-1a

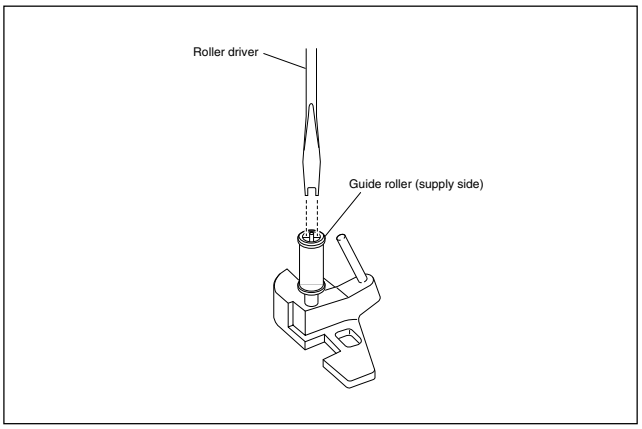

Fig. 2-3-1b

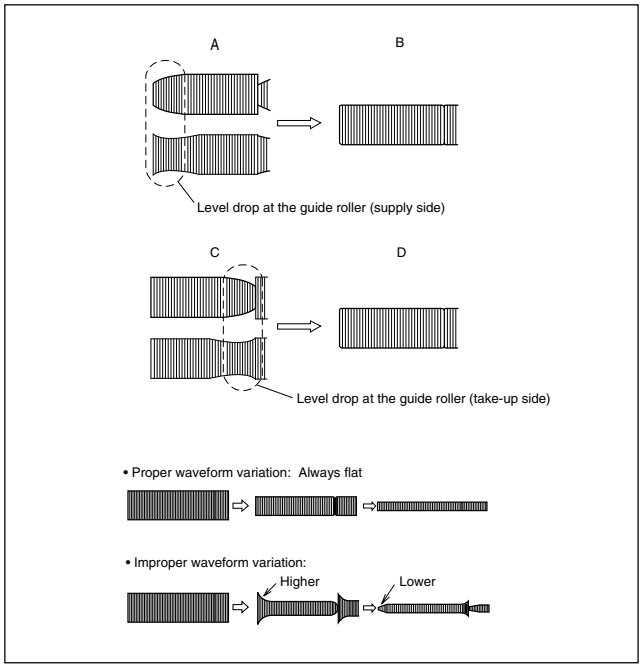

Fig. 2-3-1c

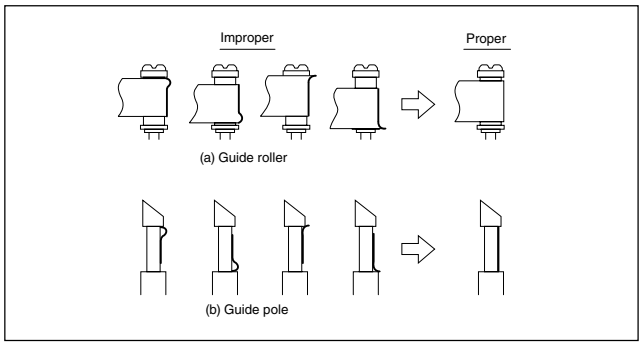

Fig. 2-3-1d

2.3.2 Height and tilt of the A/C head

Note:

- ***Set a temporary level of the height of the A/C head in advance to make the adjustment easier after the A/C head has been replaced. (See Fig.2-2-6c.)***

Signal	(A)	• Alignment tape(SP, stairstep, PAL) [MHPE]
Mode	(B)	• PB
Equipment	(C)	• Oscilloscope
Measuring point	(D1) (D2)	• AUDIO OUT terminal • TP4001 (CTL. P)
External trigger	(E)	• TP111 (D.FF)
Adjustment part	(F)	• A/C head [Mechanism assembly]
Specified value	(G)	• Maximum waveform

(1) Play back the alignment tape (A).
(2) Apply the external trigger signal to D.FF (E), to observe the AUDIO OUT waveform and Control pulse waveform at the measuring points (D1) and (D2) in the ALT mode.
(3) Set the VCR to the manual tracking mode.
(4) Adjust the AUDIO OUT waveform and Control pulse waveform by turning the screws (1), (2) and (3) little by little until both waveforms reach maximum. The screw (1) and (3) are for adjustment of tilt and the screw (2) for azimuth.

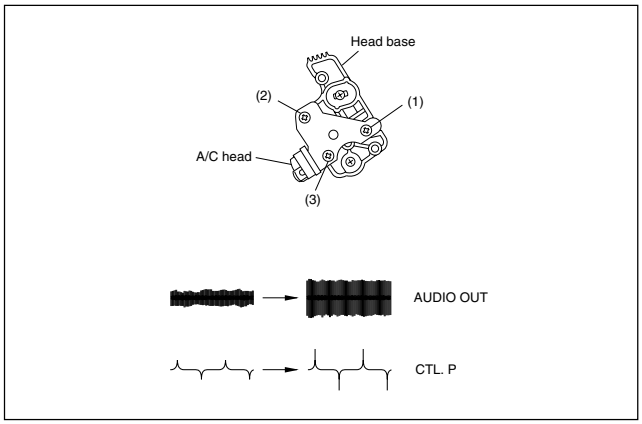

Fig. 2-3-2a

2.3.3 A/C head phase (X-value)

Signal	(A1)	• Alignment tape(SP, stairstep, PAL) [MHPE]
Mode	(B)	• PB
Equipment	(C)	• Oscilloscope
Measuring point	(D)	• TP106 (PB. FM)
External trigger	(E)	• TP111 (D.FF)
Adjustment part	(F)	• A/C head base [Mechanism assembly]
Specified value	(G)	• Maximum V.PB FM waveform
Adjustment tool	(H)	• A/C head positioning tool [PTU94010]

(1) Play back the alignment tape (A1).
(2) Apply the external trigger signal to D.FF (E), to observe the V.PB FM waveform at the measuring point (D).
(3) Set the VCR to the manual tracking mode.
(4) Loosen the screws (4) and (5), then set the A/C head positioning tool to the innermost projected part of the A/C head. (See Fig. 2-3-3a.)
(5) Turn the A/C head positioning tool fully toward the capstan. Then turn it back gradually toward the drum and stop on the second peak point position of the V.PB FM waveform output level. Then tighten the screws (4) and (5).
(6) Perform the tracking operation and make sure that the V.PB FM waveform is at its maximum.
If it is not at maximum, loosen the screws (4) and (5), and turn the A/C head positioning tool to bring the A/C head to a position, around where the waveform reaches its maximum for the first time. Then tighten the screws (4) and (5).

[Perform adjustment steps (7) to (10) only for 2 Head models equipped with LP mode.]

(7) Then play back the alignment tape (A2).
(8) Set the VCR to the manual tracking mode.
(9) Perform the tracking operation and make sure that the V.PB FM waveform is at its maximum.
(10) If it is not at maximum, loosen the screws (4) and (5), and turn the A/C head positioning tool to bring the A/C head to a position, around where the waveform reaches its maximum for the first time. Then tighten the screws (4) and (5).

Note:

- ***After adjusting, always perform the confirmation and re-adjustment of the item 2.3.4.***

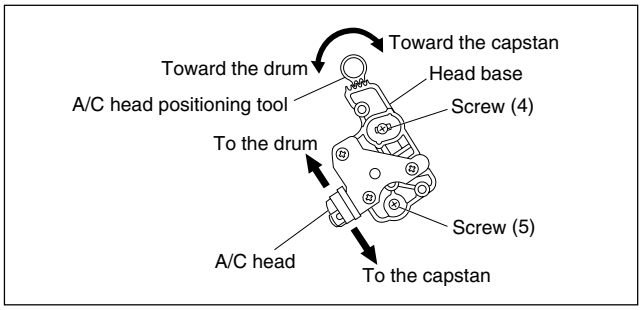

Fig. 2-3-3a

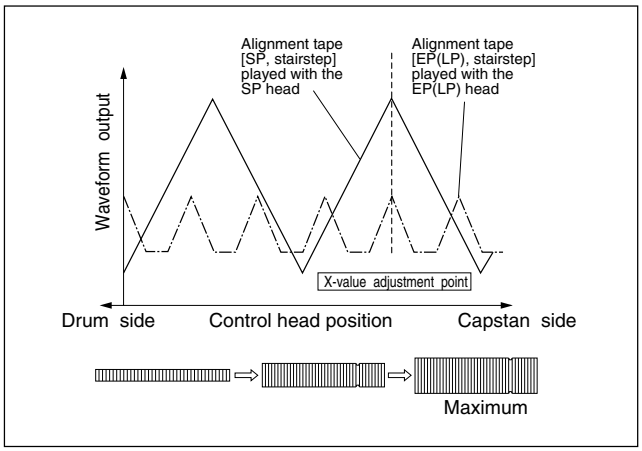

Fig. 2-3-3b

2.3.4 Standard tracking preset

Signal	(A)	• Alignment tape(LP, stairstep, PAL) [MHPE-L]
Mode	(B)	• PB → Auto adjust
Equipment	(C)	• Oscilloscope
Measuring point	(D)	• TP106 (PB. FM)
External trigger	(E)	• TP111 (D.FF)
Adjustment part	(F)	• Jig RCU: Code “50”
Specified value	(G)	• STOP mode (Maximum V.PB FM waveform)
Adjustment tool	(H)	• Jig RCU [PTU94023B]

(1) Play back the alignment tape (A).
(2) Apply the external trigger signal to D.FF (E), to observe the V.PB FM waveform at the measuring point (D).
(3) Confirm that the automatic tracking operation is completed.
(4) Set the VCR to the Auto adjust mode by transmitting the code (F) twice from the Jig RCU. When the VCR enters the stop mode, the adjustment is completed.
(5) If the VCR enters the eject mode, perform adjustment for the audio control head phase (X-value) again.

2.3.5 Tension pole position

Signal	(A)	• Back tension cassette gauge [PUJ48076-2]
Mode	(B)	• PB
Adjustment part	(F)	• Adjust pin [Mechansim assembly]
Specified value	(G)	• 25 - 51 gf•cm (2.45 – 5 × 10^{-3} Nm]

(1) Play back the back tension cassette gauge (A).
(2) Check that the indicated value on the left side gauge is within the specified value (G).
(3) If the indicated value is not within the specified value (G), perform the adjustment in a following procedure.
  1) Set the VCR to the mechanism service mode. (See SECTION 1 DISASSEMBLY.)
  2) Set the VCR to the play back mode and adjust by turning adjustment pin to align the tension arm assembly edge with the main deck hole (A) on the right edge marker. (See Fig. 2-3-5a)

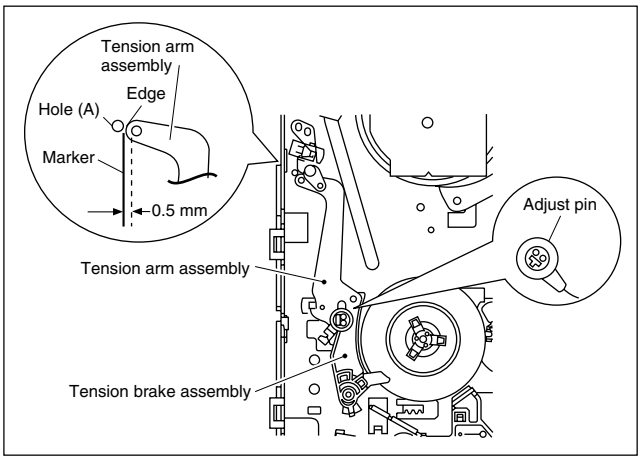

Fig. 2-3-5a

Mechanism Timing Chart

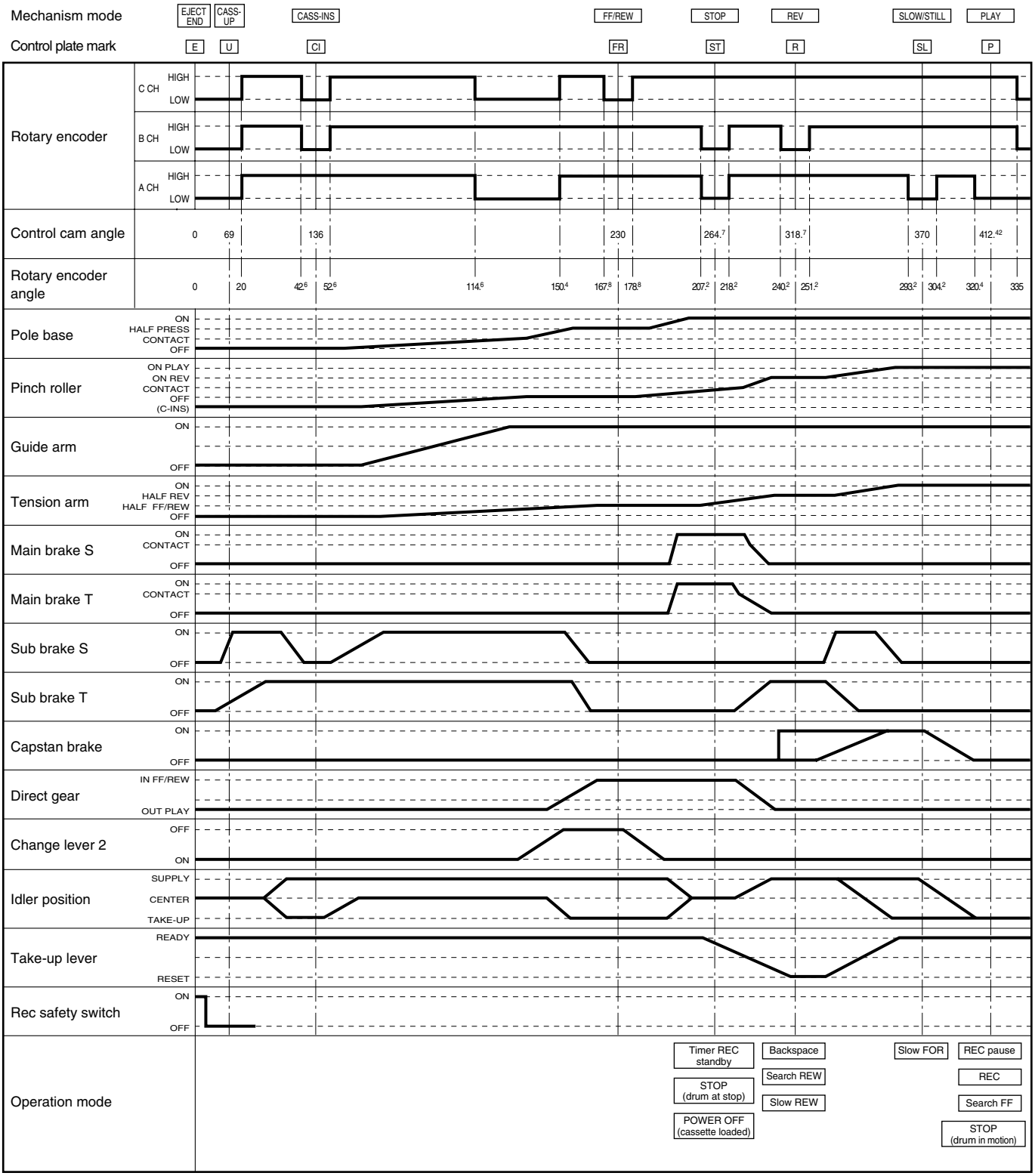

SECTION 3
ELECTRICAL ADJUSTMENT

3.1 Precaution

The following adjustment procedures are not only necessary after replacement of consumable mechanical parts or board assemblies, but are also provided as references to be referred to when servicing the electrical circuitry.
In case of trouble with the electrical circuitry, always begin a service by identifying the defective points by using the measuring instruments as described in the following electrical adjustment procedures. After this, proceed to the repair, replacement and/or adjustment. If the required measuring instruments are not available in the field, do not change the adjustment parts (variable resistor, etc.) carelessly.

3.1.1 Required test equipments

- Color (colour) television or monitor
- Oscilloscope: wide-band, dual-trace, triggered delayed sweep
- Frequency counter
- Audio level meter
- Signal generator: RF / IF sweep / marker
- Signal generator: stairstep, color (colour) bar [PAL]
- Recording tape (VHS/SVHS)
- Digit-key remote controller (provided)

3.1.2 Required adjustment tools

Jig RCU PTU94023B	Alignment tape (SP, stairstep, PAL) MHPE	Alignment tape (LP, stairstep, PAL) MHPE-L
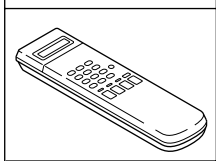	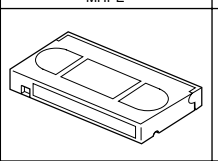	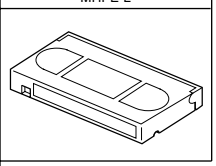
LPF PTU93006	Alignment tape (S-VHS, SP/LP, color (colour) bar) MH-2H	
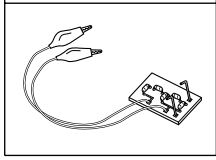	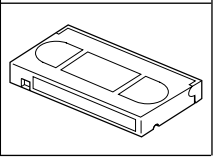	

3.1.3 Color (colour) bar signal,Color (colour) bar pattern

• Color(colour) bar signal [PAL]

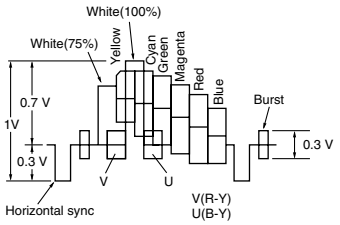

• Color(colour) bar pattern [PAL]

3.1.4 Switch settings and standard precautions

The SW settings of the VCR and the standard precautions for the electrical adjustments are as follows.

- ***When using the Jig RCU, it is required to set the VCR to the Jig RCU mode (the mode in which codes from the Jig RCU can be received). (See SECTION 1 DISASSEMBLY.)***

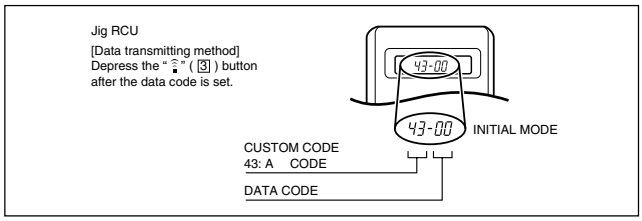

Fig. 3-1-4a Jig RCU [PTU94023B]

- ***Set the switches as shown below unless otherwise specified on the relevant adjustment chart. The switches that are not listed below can be set as desired.***
  If the VCR is not equipped with the functions detailed below, setup is not required.

AUTO PICTURE/VIDEO CALIBRATION/ B.E.S.T./D.S.P.C.	OFF
PICTURE CONTROL/SMART PICTURE	NORMAL/NATURAL
VIDEO STABILIZER	OFF
TBC	ON
Digital 3R	ON
VIDEO NAVIGATION/TAPE MANAGER	OFF

- ***If there is a reference to a signal input methed in the signal column of the adjustment chart, "Ext. S-input" means the Y/C separated video signal and "Ext. input" means the composite video signal input.***
- ***Unless otherwise specified, all measuring points and adjustment parts are located on the Main board.***

3.1.5 EVR Adjustment

Some of the electrical adjustments require the adjustment performed by the EVR system. The main unit have EEPROMs for storing the EVR adjustment data and user setups.

Notes:

- ***In the EVR adjustment mode, the value is varied with the channel buttons (+, –). The adjusted data is stored when the setting mode changes (from PB to STOP, when the tape speed is changed, etc.). Take care to identify the current mode of each adjustment item when making an adjustment.***
- ***When changing the address setting in the EVR adjustment mode, use the Jig RCU or the remote controller having numeric keypad with which a numeric code can be directly input.***
  The remote control code of the Jig RCU corresponds to each of the digit keys on the remote controller as follows.

Digit-key	0	1	2	3	4	5	6	7	8	9
Code	20	21	22	23	24	25	26	27	28	29

- ***As the counter indication and remaining tape indication are not displayed FDP during the EVR adjustment mode, check them on the TV monitor screen.***
- ***When performing the EVR adjustment, confirm that the FDP indication is changed to the EVR mode, as shown below.***

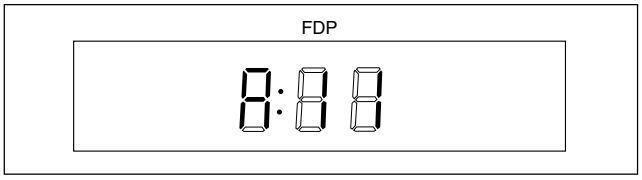

Fig. 3-1-5a EVR mode

3.2 Servo circuit

3.2.1 Switching point

Signal	(A1) (A2)	• Stairstep signal • Alignment tape (SP,stairstep,PAL) [MHPE]
Mode	(B)	• PB
Equipment	(C)	• Oscilloscope
Measuring point	(D1) (D2)	• VIDEO OUT terminal (75Ω terminated) • TP106 (PB. FM)
External trigger	(E)	• TP111 (D.FF)/slope : –
Adjustment part	(F)	• Jig code “5A”
Specified value	(G)	• 7.5 ± 0.5H
Adjustment tool	(H)	• Jig RCU [PTU94023B]

(1) Play back the signal (A1) of the alignment tape (A2).
(2) Apply the external trigger signal to D.FF (E) to observe the VIDEO OUT waveform and V.PB FM waveform at the measuring points (D1) and (D2).
(3) Set the VCR to the manual tracking mode.
(4) Adjust tracking so that the V.PB FM waveform becomes maximum.
(5) Set the VCR to the Auto adjust mode by transmitting the code (F) from the Jig RCU. When the VCR enters the stop mode, the adjustment is completed.
(6) If the VCR enters the eject mode, repeat steps (1) to (5) again.
(7) Play back the alignment tape (A2) again, confirm that the switching point is the specified value (G).

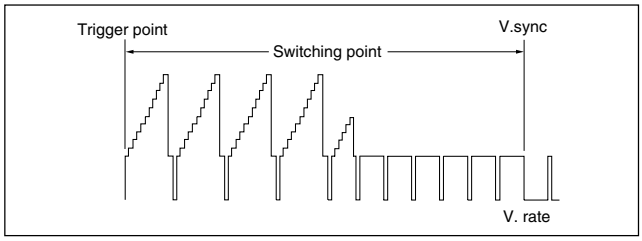

Fig. 3-2-1a Switching point

3.2.2 Slow tracking preset

Signal	(A1) (A2)	• Ext. input • Color (colour) bar signal [PAL]
Mode	(B1) (B2)	• VHS SP • VHS LP
Measuring point	(D)	• TV-Monitor
Adjustment part	(F)	• Jig code “71“ or “72”
Specified value	(G)	• Minimum noise
Adjustment tool	(H)	• Jig RCU [PTU94023B]

(1) Record the signal (A2) in the mode (B1), and play back the recorded signal.
(2) Set the VCR to the manual tracking mode.
(3) Set the VCR to the FWD slow (+1/6x) mode.
(4) Transmit the code (F) from the Jig RCU to adjust so that the noise bar becomes the specified value (G) on the TV monitor in the slow mode.
(5) Set the VCR to the Stop mode.
(6) Confirm that the noise bar is (G) on the TV monitor in the slow mode.
(7) Repeat steps (3) to (6) in the REV slow (–1/6x) mode.
(8) Repeat steps (1) to (7) in the mode (B2).

Note:
- ***For FWD slow (+1/6x) playback, transmit the code “08” from the Jig RCU to enter the slow playback mode, and transmit the code “D0” for REV slow (–1/6x) mode.***

3.3 Video circuit

3.3.1 D/A level

Signal	(A1) (A2) (A3)	• Ext. S-input / Ext. input • Color (colour) bar signal [PAL] • S-VHS tape
Mode	(B)	• S-VHS • EE
Equipment	(C)	• Oscilloscope
Measuring point	(D)	• Y OUT terminal (75Ω terminated)
Adjustment part	(F)	• VR1201 (D/A LEVEL ADJ) [2D DIGITAL board]
Specified value (Note)	(G)	• 1.00 ± 0.015 Vp-p (reference value)

(1) Insert the cassette tape (A3) to enter the mode (B).
(2) Observe the Y OUT waveform at the measuring point (D).
(3) Check the Y level value when the External S-input (Y/C separated video signal).
(4) Switch the input signal to the External input (composite video signal), and adjust the adjustment part (F) so that the Y level becomes the same value observed in step (3).

Note:
- ***The specified value (G) is just a reference value to be obtained when the External S-Video (Y/C separated video) signal is input. In actual adjustment, set it to the value observed in step (3).***

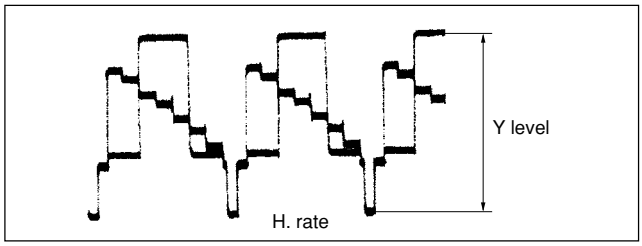

Fig. 3-3-1a D/A level

3.3.2 EE Y/PB Y (S-VHS/VHS) level

Signal	(A1) (A2)	• Ext. input • Color (colour) bar signal [PAL]
Mode	(B1) (B2) (B3)	• EE • S-VHS SP • VHS SP
Equipment	(C)	• Oscilloscope
Measuring point	(D)	• Y OUT terminal (75Ω terminated)
EVR mode EVR address	(F1) (F2) (F3) (F4)	• Jig code “57” • A : 11 • Jig code “21” twice • Jig code “18” or “19” (Channel +/-)
Specified value	(G)	• 1.00 ± 0.05 Vp-p
Adjustment tool	(H)	• Jig RCU [PTU94023B]

(1) Observe the Y OUT waveform at the measuring point (D).
(2) Set the VCR to the EVR mode by transmitting the code (F1) from the Jig RCU.

(3) Set the EVR address to (F2) by transmitting the code (F3) from the Jig RCU.
(4) Transmit the code (F4) from the Jig RCU to adjust so that the Y level of the Y OUT waveform becomes the specified value (G).
(5) Release the EVR mode of the VCR by transmitting the code (F1) from the Jig RCU again. (When the EVR mode is released, the adjusted data is memorized.)
(6) Record the signal (A2) in the mode (B2), and play back the recorded signal.
(7) Set the VCR to the manual tracking mode.
(8) Repeat steps (1) to (5) in the mode (B2).
(9) Record the signal (A2) in the mode (B3), and play back the recorded signal.
(10) Set the VCR to the manual tracking mode.
(11) Repeat steps (1) to (5) in the mode (B3).

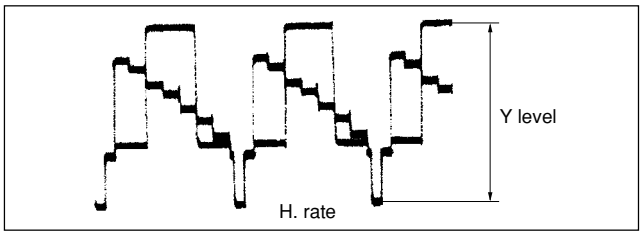

Fig. 3-3-2a EE/PB Y level

3.3.3 REC color (colour) level

Signal	(A1) (A2) (A3)	• Alignment tape(S-VHS, SP/LP, Color(colour) bar) [MH-2H] • Ext. input • Color (colour) bar signal [PAL]
Mode	(B1) (B2)	• S-VHS SP • S-VHS LP
Equipment	(C)	• Oscilloscope
Measuring point	(D1) (D2)	• TP106 (PB. FM) • PB color (colour) output of the LPF
External trigger	(E)	• TP111 (D.FF)
EVR mode EVR address	(F1) (F2) (F3) (F4)	• Jig code “57” • A : 02 • Jig code “20” and “22” • Jig code “18” or “19” (Channel +/-)
Specified value	(G)	• SP: “B” x 125 ± 5% • LP: “B” x 125 ± 5%
Adjustment tool	(H1) (H2)	• Jig RCU [PTU94023B] • LPF [PTU93006] (See Fig. 3-3-3a.)

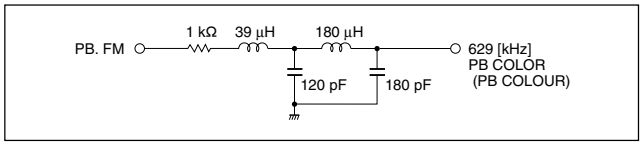

Fig. 3-3-3a LPF

(1) Connect the adjustment tool (H2) to the measuring point (D1).
(2) Apply the external trigger signal to D.FF (E) to observe the PB color (colour) waveform at the measuring point (D2).
(3) Play back the signal (A3) in the mode (B1) of the alignment tape (A1).
(4) Set the VCR to the manual tracking mode.
(5) Adjust tracking so that the PB color (colour) waveform becomes maximum. Make a note of the higher PB color (colour) level as “B” at this time.
(6) Record the signal (A3) in the mode (B1), and play back the recorded signal.
(7) Set the VCR to the EVR mode by transmitting the code (F1) from the Jig RCU.
(8) Set the EVR address to (F2) by transmitting the code (F3) from the Jig RCU.
(9) Transmit the code (F4) from the Jig RCU to adjust so that the higher level channel becomes the specified value (G) of the note "B" level as shown in Fig. 3-3-3b. (Adjust before recording, then confirm it by playing back.)
(10) After adjustment, record the signal (A3) then playing it back again. At this time, confirm that there is no inverting phenomenon or noise appearing on the playback screen.
(11) Release the EVR mode of the VCR by transmitting the code (F1) from the Jig RCU again. (When the EVR mode is released, the adjusted data is memorized.)
(12) Repeat steps (3) to (11) in the mode (B2).

Note:

- ***After adjusting, always perform the confirmation and re-adjustment of the item 3.4.1.***

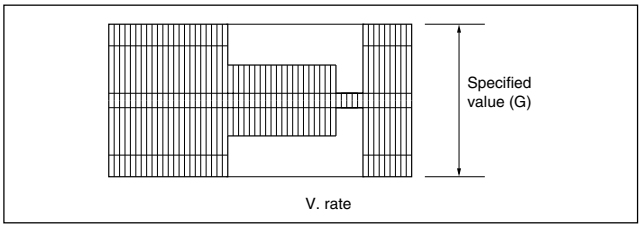

Fig. 3-3-3b REC color (colour) level

3.3.4 Video EQ (Frequency response)

Signal	(A1) (A2)	• Ext. S-input • Video sweep signal
Mode	(B1) (B2) (B3)	• S-VHS SP • S-VHS LP • Picture Control / Smart Picture REC : Normal / Natural PB : Edit / Distinct
Equipment	(C)	• Oscilloscope
Measuring point Frequency marker	(D1) (D2)	• Y OUT terminal (75Ω terminated) • 3 [MHz]
External trigger	(E)	• TP111 (D.FF)
EVR mode EVR address	(F1) (F2) (F3) (F4)	• Jig code “57” • A : 03 • Jig code “20” and “23” • Jig code “18” or “19” (Channel +/-)
Specified value	(G)	• SP: 3.6 ± 0.4 div. (–1 ± 1 dB) • LP: 3.2 ± 0.4 div. (–2 ± 1 dB)
Adjustment tool	(H)	• Jig RCU [PTU94023B]

(1) Apply the external trigger signal to D.FF (E) to observe the Y OUT waveform at the measuring point (D1).
(2) Record the signal (A2) in the mode (B1), and play back the recorded signal.
(3) Set the VCR to the manual tracking mode.
(4) Set the VCR to the EVR mode by transmitting the code (F1) from the Jig RCU.
(5) Set the EVR address to (F2) by transmitting the code (F3) from the Jig RCU.
(6) Set the slope of the oscilloscope to the channel having higher (D2) marker level of the Y OUT waveform [signal (A2)]. Then set the 100 kHz marker level to the “4” scale on the oscilloscope. In this condition, transmit the code (F4) from the Jig RCU to adjust so that the (D2) marker level reaches the specified value (G).

(7) Release the EVR mode of the VCR by transmitting the code (F1) from the Jig RCU again. (When the EVR mode is released, the adjusted data is memorized.)
(8) Repeat steps (2) to (7) in the mode (B2).

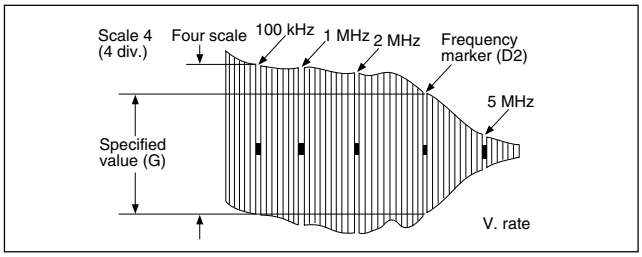

Fig. 3-3-4a Video EQ (Frequency Response)

3.3.5 Auto picture initial setting

Signal	(A1) (A2) (A3)	• Ext. input • Video: Optional • VHS tape
Mode	(B)	• EE → Auto adjust (SP/LP REC → PB)
Adjustment part	(F)	• Jig code “58”
Specified value	(G)	• STOP mode
Adjustment tool	(H)	• Jig RCU [PTU94023B]

(1) Insert the cassette tape (A3).
(2) Set the VCR to the Auto adjust mode by transmitting the code (F) from the Jig RCU. When the VCR enters the stop mode, the adjustment is completed. When the VCR enters the eject mode, repeat steps (1) to (2) again.

3.4 Audio circuit

Notes:

- ***This adjustment should be done after the “REC color (colour) level adjustment” for the video circuit has been completed.***
- ***GND (Ground) should be taken from the Tuner shield case.***

3.4.1 Audio REC FM

Signal	(A1) (A2) (A3)	• Ext. input • Audio: No signal • Video: Color (colour) bar signal [PAL]
Mode	(B)	• S-VHS LP
Equipment	(C)	• Oscilloscope
Measuring point	(D)	• TP2253 (A. PB. FM)
External trigger	(E)	• TP111 (D.FF)
EVR mode EVR address	(F1) (F2) (F3) (F4)	• Jig code “57” • A : 30 • Jig code “23” and “20” • Jig code “18” or “19” (Channel +/-)
Specified value	(G1) (G2)	• 400 ± 100 mVp-p • More than 250 mVp-p
Adjustment tool	(H)	• Jig RCU [PTU94023B]

(1) Apply the external trigger signal to D.FF (E) to observe the Audio PB FM waveform at the measuring point (D).
(2) Record the signal (A3) with no audio signal input in the mode (B), and play back the recorded signal.
(3) Set the VCR to the manual tracking mode.
(4) If the A.PB FM level is not within the specified value (G1), perform the adjustment in a following procedure.
(5) Set the VCR to the EVR mode by transmitting the code (F1) from the Jig RCU.
(6) Set the EVR address to (F2) by transmitting the code (F3) from the Jig RCU.
(7) Transmit the code (F4) from the Jig RCU to adjust so that the A.PB FM level of the higher channel level becomes the specified value (G1). (Adjust before recording, then confirm it by playing back.)
(8) If the specified value (G1) is not obtained, transmit the code (F4) from the Jig RCU to adjust so that the waveform level of the lower channel level becomes the specified value (G2). (Adjust before recording, then confirm it by playing back.)
(9) Release the EVR mode of the VCR by transmitting the code (F1) from the Jig RCU again. (When the EVR mode is released, the adjusted data is memorized.)

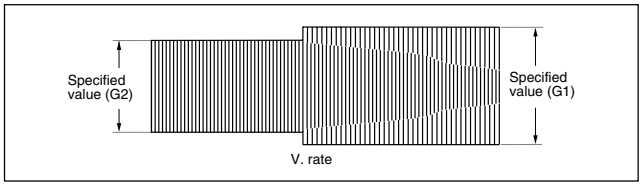

Fig. 3-4-1a Audio REC FM

3.5 Syscon circuit

Note:

- ***When perform this adjustment, remove the Mechanism assembly.***

3.5.1 Timer clock

Signal	(A)	• No signal
Mode	(B)	• EE
Equipment	(C)	• Frequency counter
Measuring point Short point	(D1) (D2) (D3)	• IC3001 pin 61 • IC3001 pin 24 • C3026 + and –
Adjustment part	(F)	• C3025 (TIMER CLOCK)
Specified value	(G)	• 1024.008 ± 0.001 Hz (976.5549 ± 0.0010 μsec)

(1) Connect the frequency counter to the measuring point (D1).
(2) Connect the short wire between the short point (D2) and Vcc (5V).
(3) Short the leads of capacitor (D3) once in order to reset the microprocessor of the SYSCON.
(4) Disconnect the short wire between the short point (D2) and Vcc then connect it again.
(5) Adjust the Adjustment part (F) so that the output frequency becomes the specified value (G).

SECTION 4
CHARTS AND DIAGRAMS

NOTES OF SCHEMATIC DIAGRAM

Safety precautions
The Components identified by the symbol ⚠ are critical for safety. For continued safety, replace safety critical components only with manufacturer's recommended parts.

1. Units of components on the schematic diagram

Unless otherwise specified.

1) All resistance values are in ohm, 1/6 W, 1/8 W (refer to parts list).
   Chip resistors are 1/16 W.
   K or k: kΩ (1000Ω), M: MΩ (1000kΩ)
2) All capacitance values are in μF, (P: PF).
3) All inductance values are in μH, (m: mH).
4) All diodes are 1SS133, MA165 or 1N4148M (refer to parts list).

2. Indications of control voltage

AUX : Active at high

$\overline{\text{AUX}}$ or AUX(L) : Active at low

3. Interpreting Connector indications

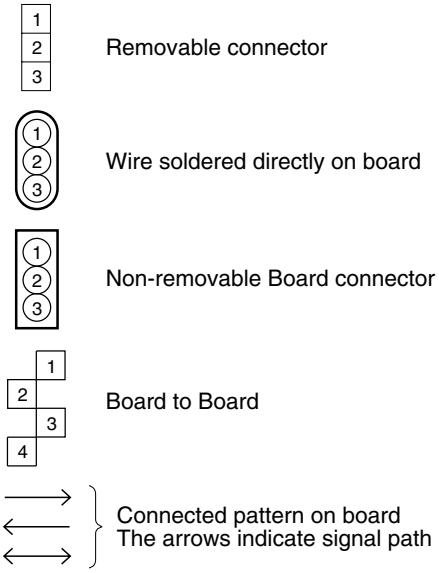

4. Voltage measurement

1) Video circuits
   REC : Colour bar signal in SP mode, normal VHS mode
   PB : Alignment tape, colour bar SP mode, normal VHS mode
   — : Unmeasurable or unnecessary to measure
2) Audio circuits
   REC : 1KHz, –8 dBs sine wave signal in SP mode, Normal VHS mode
   PB : REC then playback it
3) Movie Camera circuits
   Measured using a correctly illuminated gray scale or colour bar test charts in the E-E mode
4) Indication on schematic diagram
   Voltage Indications for REC and PB mode on the schematic diagram are as shown below.

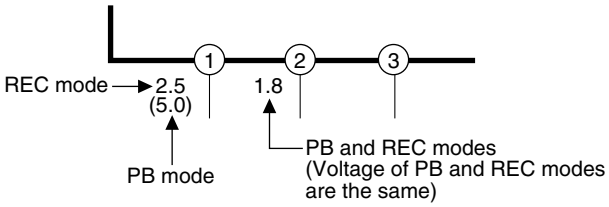

Note: If the voltages are not indicated on the schematic diagram, refer to the voltage charts.

5. Waveform measurement

1) Video circuits
   REC : Colour bar signal in SP mode, normal VHS mode
   PB : Alignment tape, colour bar SP mode, normal VHS mode
2) Audio circuits
   REC : 1KHz, –8 dBs sine wave signal in SP mode, normal VHS mode
   PB : REC then playback it
3) Movie Camera circuits
   Measured using a correctly illuminated gray scale or colour bar test chatrs in the E-E mode
4) Indication on schematic diagram
   Waveform indications on the schematic diagram are as shown below.

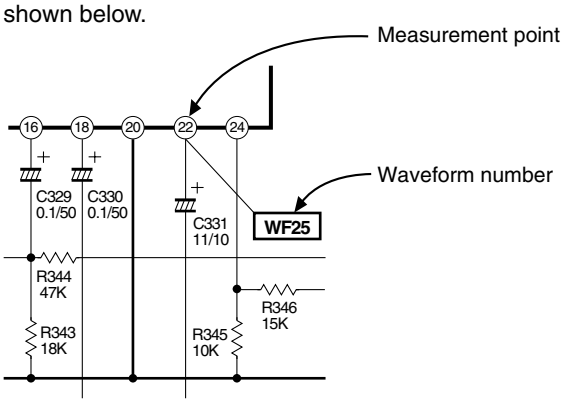

5) Waveform indications

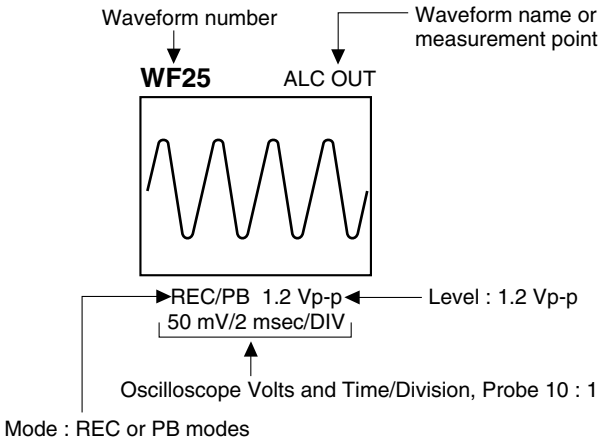

6. Signal path Symbols

The arrows indicate the signal path as follows.

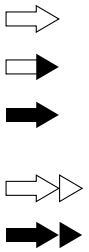

Playback signal path

Playback and recording signal path

Recording signal path
(including E-E signal path)

Capstan servo path

Drum servo path

(Example)

R-Y Playback R-Y signal path

Y Recording Y signal path

7. Indication of the parts for adjustments

The parts for the adjustments are surrounded with the circle as shown below.

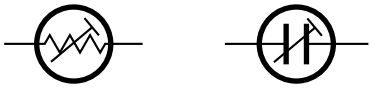

8. Indication of the parts not mounted on the circuit board

"OPEN" is indicated by the parts not mounted on the circuit board.

CIRCUIT BOARD NOTES

1. Foil and Component sides

1) Foil side (B side) :
   Parts on the foil side seen from foil face (pattern face) are indicated.
2) Component side (A side) :
   Parts on the component side seen from component face (parts face) indicated.

2. Parts location guides

Parts location are indicated by guide scale on the circuit board.

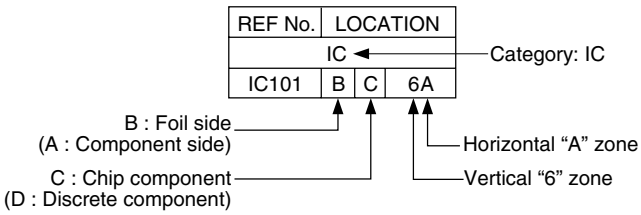

Note:

For general information in service manual, please refer to the Service Manual of GENERAL INFORMATION Edition 4 No. 82054D (January 1994).

4.1 BOARD INTERCONNECTIONS

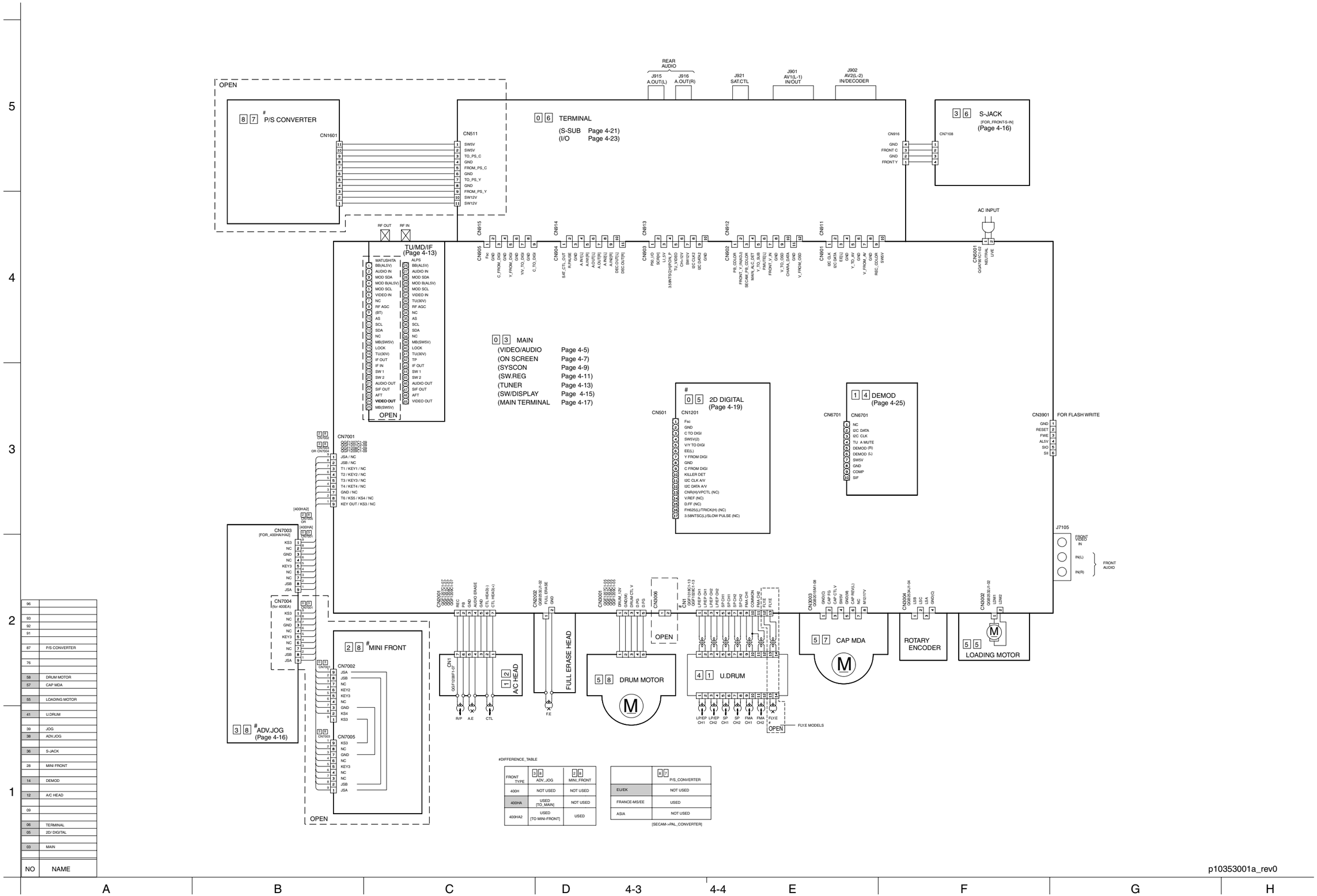

4.2 MAIN (VIDEO/AUDIO) SCHEMATIC DIAGRAM

Note : The Parts Number, value and rated voltage etc. in the Schematic Diagram are for references only. When replacing the parts, refer to the Parts List.

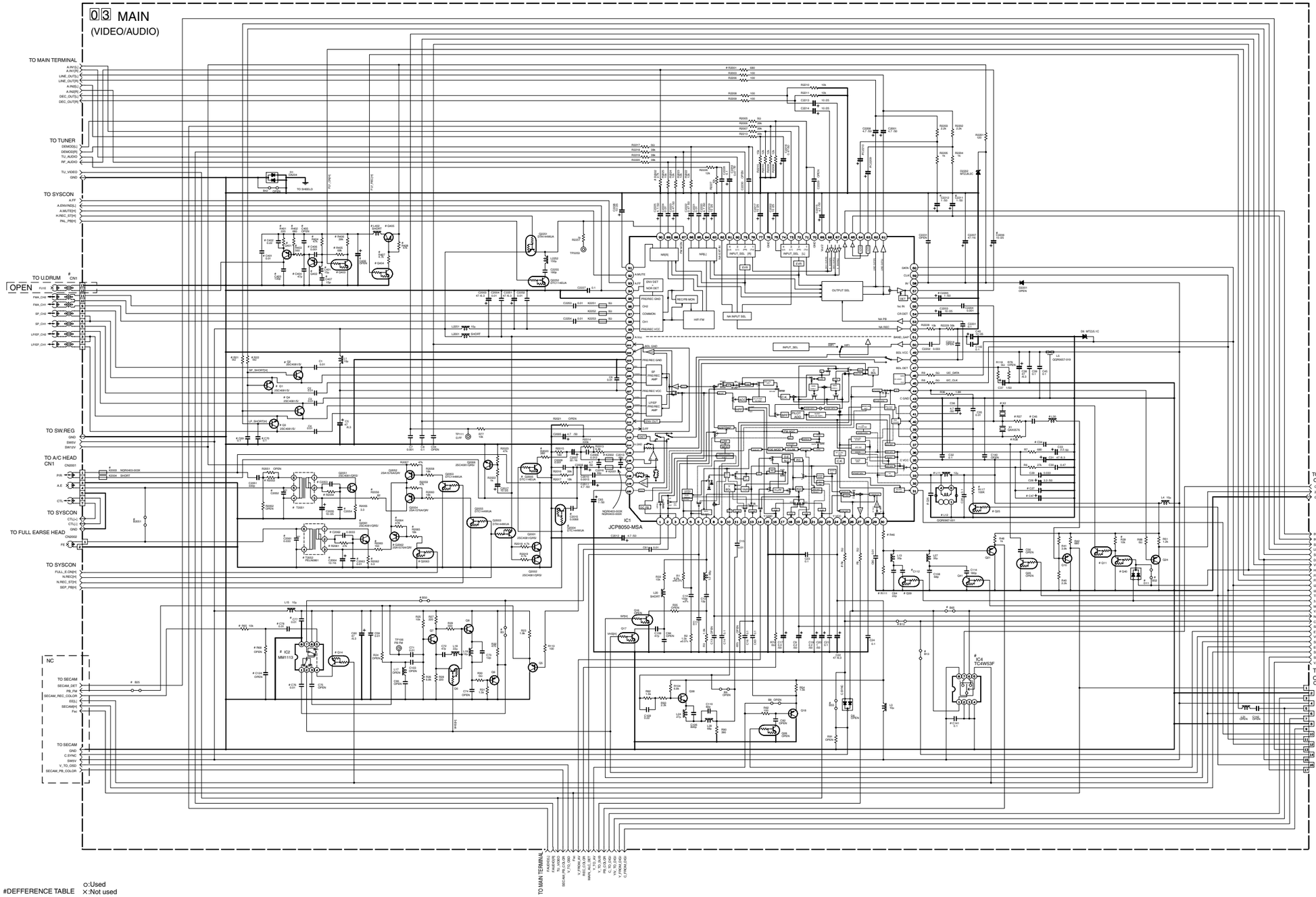

#DEFFERENCE TABLE

○:Used
×:Not used

V14 LINEUP	CN1	FLY.ERASE R401-R408 C401-C408 L401-L402 C409	Q1-Q4 2SB1219 D21,D22	H.SHORT R37	Fsc OUT R38	C46	L30	REC APC DET C27 or C47	PAL_EP TRICK R39 G11 C40	B52	D11	ACC DET C34	3D B13	X2 0.01uF QAX0575	R4	PB_C_LEVEL/TRAP R46	R111	C112 Q39	for_MS IC2, Q14, R66, R67, R68, R70, R73, R74, R68-C124	PAL B55 B56	B3	C.SYNC B12	EP/MODE R2020 C2015 Q2004 Q2005	RF-OUT R2001 R2002 C2002 C2003	AUDIO.DUBBING T2051	B2051	R2053	R2054	R2056	C2052	C2053	C2054	Q2061-Q2063 T2052 R2061-R2065 C2061-C2064	LEVEL.IND. C2209 C2210	C2211 C2212	CE L11	L12	C25	K2001 K2002 K2003
S6855,50,51,52,53E1/EK	1-11	×	○	×	tk	100p	SHORT	C27=0.022	○	○	×	0.1	×	×	○	560	×	×	×	○	○	○	○	○	PELN0832	○	4.7k	12k	47	0.082	0.0047	0.022	×	10/16	×	×	○	6p	○
S7860EK	1-11	×	○	×	tk	100p	SHORT	C27=0.022	×	×	×	0.22	○	0.01uF	×	470	×	×	×	○	○	×	○	○	PELN0860	×	4.7k	15k	100	0.033	0.0033	0.01	○	0.1/50	○	×	○	6p	○
S7850,7851EU	1-13	○	×	×	tk	100p	SHORT	C27=0.022	○	○	×	0.1	×	×	○	560	×	×	×	○	○	○	○	○	PELN0860	×	4.7k	15k	100	0.033	0.0033	0.01	○	0.1/50	○	×	○	6p	○
S8850EU/EK	1-13	○	×	×	tk	100p	SHORT	C27=0.022	×	×	×	0.22	○	0.01uF	×	470	×	×	×	○	○	×	○	○	PELN0860	×	4.7k	15k	100	0.033	0.0033	0.01	○	0.1/50	○	×	○	6p	○
S6850MS	1-11	×	○	×	tk	100p	SHORT	C27=0.022	○	○	×	0.1	×	×	○	560	×	×	○	×	○	×	○	○	PELN0832	○	4.7k	12k	47	0.082	0.0047	0.022	×	10/16	×	×	○	6p	○
S7860,7851MS	1-14	○	×	×	tk	100p	SHORT	C27=0.022	○	○	×	0.1	×	×	○	560	×	×	○	○	○	×	○	○	PELN0860	×	4.7k	15k	100	0.033	0.0033	0.01	○	0.1/50	○	×	○	6p	○
S8850MS	1-14	○	×	×	tk	100p	SHORT	C27=0.022	×	×	×	0.22	○	0.01uF	○	470	×	×	○	○	×	×	○	○	PELN0860	×	4.7k	15k	100	0.033	0.0033	0.01	○	0.1/50	○	×	○	6p	○
S5800,80AM	1-11	×	○	tk	×	15p	100μ	C47=2.2/50	○	○	○	0.1	×	QAX0575	○	330	3.3k	○	×	○	○	○	○	○	PELN0860	×	4.7k	15k	100	0.033	0.0033	0.01	○	0.1/50	○	×	4p	SHORT	
S7855EE	1-11	×	○	tk	×	15p	100μ	C47=2.2/50	○	×	○	0.1	×	QAX0575	○	330	3.3k	○	×	○	○	○	○	○	PELN0860	×	4.7k	15k	100	0.033	0.0033	0.01	○	10/16	×	○	×	4p	SHORT

TITLE REC	B65	IC4 C141
YES	×	○
NO	○	×

NOTES·UNLESS OTHERWISE SPECIFIED.
ALL RESISTANCE VALUES ARE IN OHMS.
ALL INDUCTANCE VALUES ARE IN H.
ALL CAPACITANCE VALUES ARE IN μF.

ELECTROLYTIC
CERAMIC
MYLER
NON POLAR

ALL NPN TYPE TRANSISTORS ARE 2SC4081/QRS/ or 2SD1819A/QRS/ or 2PC4081/R/
ALL PNP TYPE TRANSISTORS ARE 2SA1576A/QR/ or 2SB1218A/QR/ or 2PA1576/R/
ALL NPN TYPE DIGITAL TRANSISTORS ARE DTC144WUA or UN5211E or RN1309 or PDTC144WU
ALL PNP TYPE DIGITAL TRANSISTORS ARE DTA144WUA or UN5111E or RN2309 or PDTA144WU

p10352001a_rev0

4.3 MAIN (ON SCREEN) SCHEMATIC DIAGRAM

Note : The Parts Number, value and rated voltage etc. in the Schematic Diagram are for references only. When replacing the parts, refer to the Parts List.

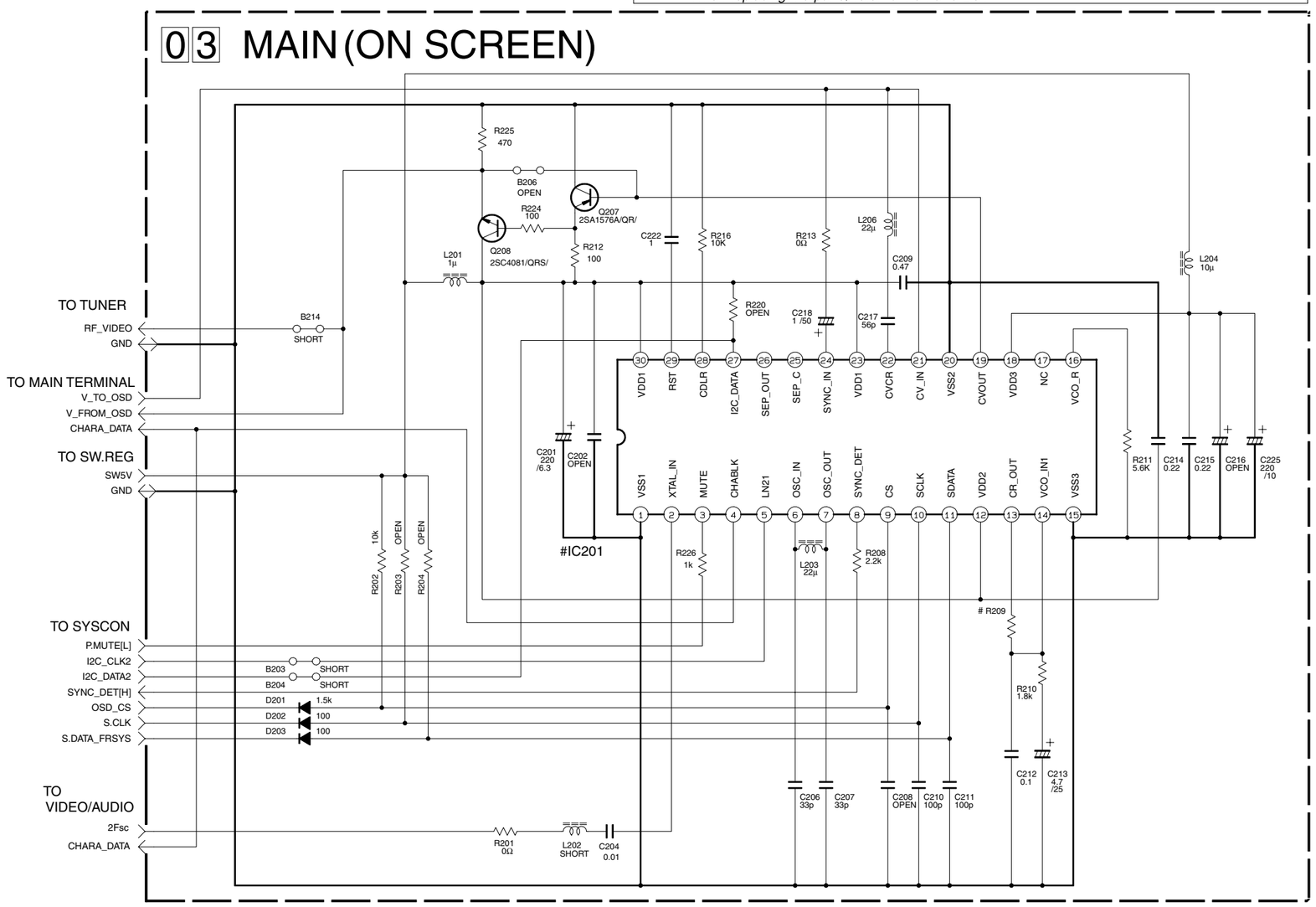

NOTES:UNLESS OTHERWISE SPECIFIED.
ALL RESISTANCE VALUES ARE IN OHMS.
ALL INDUCTANCE VALUES ARE IN H.
ALL CAPACITANCE VALUES ARE IN µF.

ELECTROLYTIC
CERAMIC
MYLER
NON POLAR

DIFFERENCE TABLE

	IC201	R209
EE	LC74776-9791	6.8k
OTHER	LC74775-9750	5.1k

p30088001a_rev0

4.4 MAIN (SYSCON) SCHEMATIC DIAGRAM

Note : The Parts Number, value and rated voltage etc. in the Schematic Diagram are for references only. When replacing the parts, refer to the Parts List.

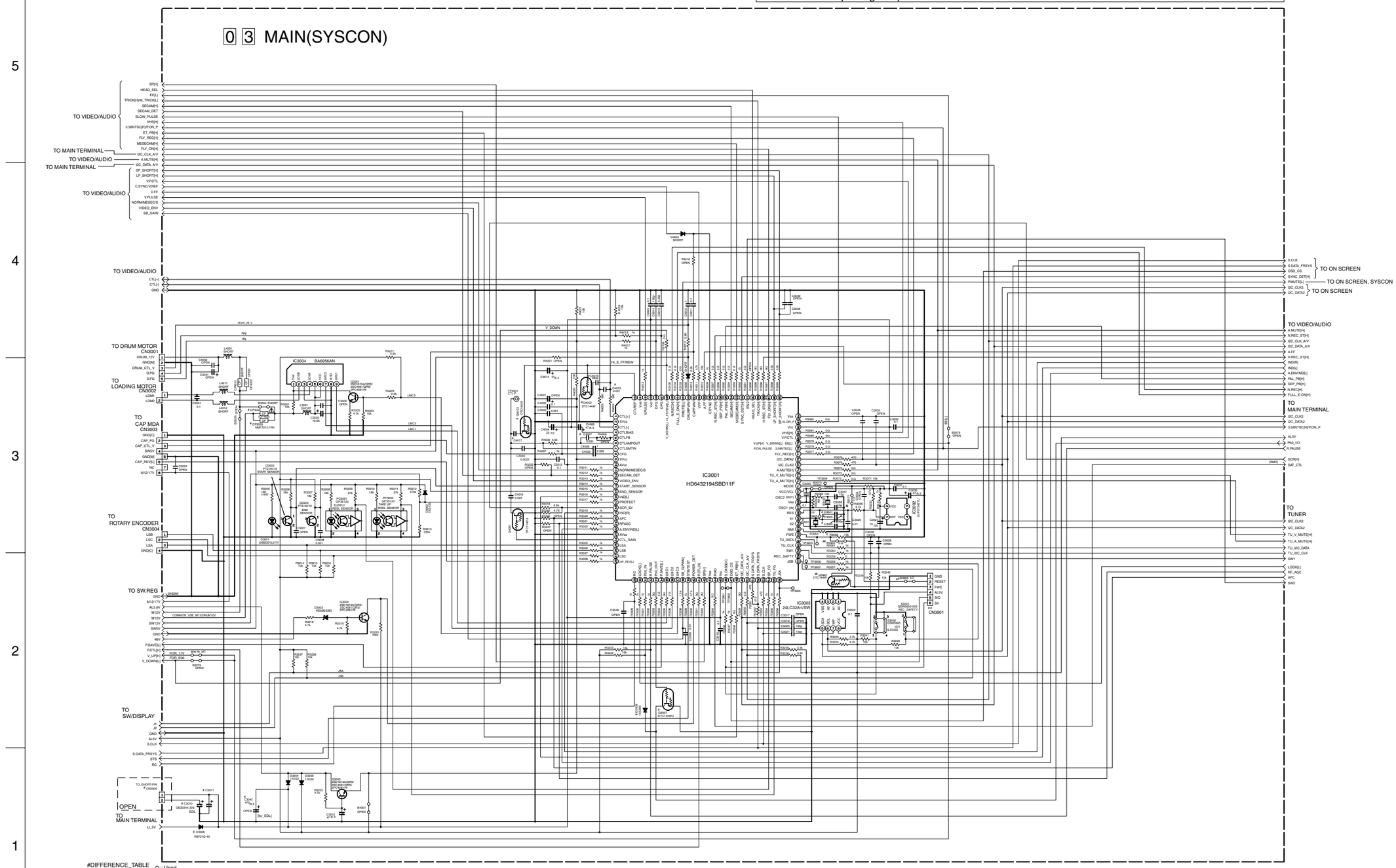

#DIFFERENCE_TABLE

○ : Used
× : Not used

BACKUP_TIME	C3010	C3011	C3042 CN3006	D3006
10MIN	X	3300/6.3	X	X
60MIN	O	X	O	X
LI_BATT	X	1000 /6.3	X	O

FEATURE_TYPE	D3006 Q3007
TV-LINK(P50)	o

MECHA_TYPE	C4015	C4016	Q4002	C4005	C4017	Q4003
Y29-2	0.001	x	x	o	x	x
Y29-T	0.001	x	x	x	o	o
Y29-T-PALEP	680p	o	o	x	o	o

SUB_CLK_ADJ	X3001	C3025	C3041	C3024
ADJ	QAX0445	o	x	22p
FIX	QAX0444	x	10p	12p

CP_TYPE	
Leaded_type	CP3002 ICP-N25
Surface_type	CP3003 NMFZ0312-1R0

NOTES:UNLESS OTHERWISE SPECIFIED.
ALL RESISTANCE VALUES ARE IN OHMS.
ALL INDUCTANCE VALUES ARE IN H.
ALL CAPACITANCE VALUES ARE IN μF.
ELECTROLYTIC
CERAMIC
MYLER
NON POLAR

##_FOR_FLASH_WRITE

p10356001a_rev0

4.5 MAIN (SW.REG) SCHEMATIC DIAGRAM

Note : The Parts Number, value and rated voltage etc. in the Schematic Diagram are for references only. When replacing the parts, refer to the Parts List.

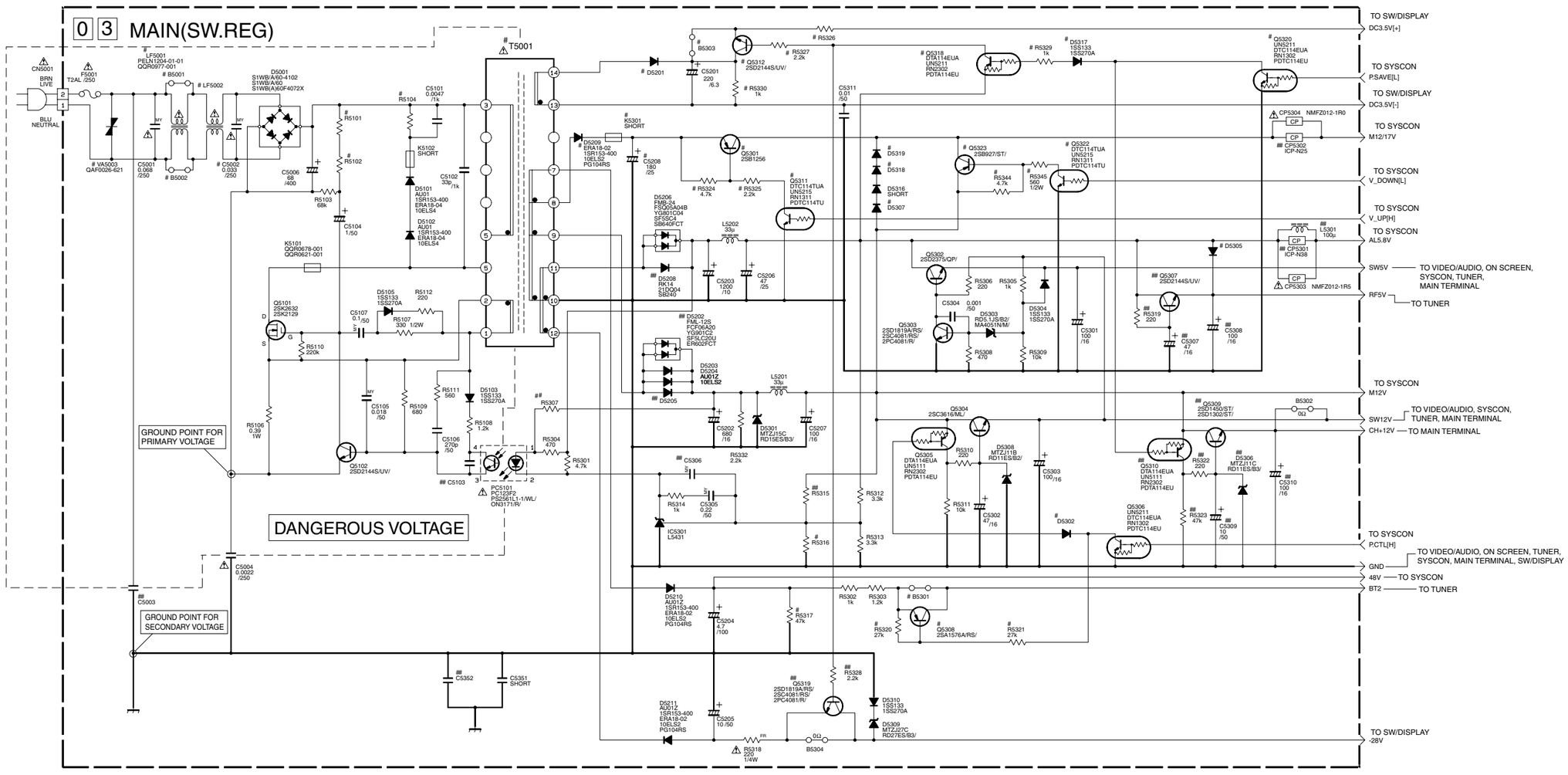

##MARK ELEMENTS ARE NOT MOUNTED

#DIFFERENCE TABLE 1

HIGH SPEED FF/REW	Q5301 Q5311 D5209 C5208 K5301 R5324 R5325	D5307
-YES-	YES	11ES2 ERA15-02 1A3G
-NO-	NO	SHORT

#DIFFERENCE TABLE 2

POWER SAVE	R5101 R5102	R5104	B5301	D5302	Q5308 R5320 R5321 R5317	B5303	Q5312 D5317 R5330 Q5318 R5327 Q5320 R5329	D5305	R5316
-YES-	330k	150k 2W	NO	1S133 1SS270A	YES	NO	YES	AK04 11EQS04 1S4	12k
-NO-	220k	68k 2W	YES	SHORT	NO	YES	NO	11ES2 ERA15-02 1A3G	10k

#DIFFERENCE TABLE 3

	B5001 B5002	C5002	LF5001	LF5002	T5001
CE	NO	YES	YES	QQR0978-001 QQR0508-001 QQR0609-001 QQR0610-001	QQS0033-001 QQS0034-001
OTHER	YES	NO	NO	QQR0532-001 QQR0533-001 QQR0916-001 QQR0926-001 QQR0816-001	QQS0030-002 QQS0031-002 QQS0036-001

#DIFFERENCE TABLE 4

EP	Q5323 Q5322 R5344 R5345	D5318 D5319
-YES-	YES	11ES2 ERA15-02 1A3G
-NO-	NO	SHORT

#DIFFERENCE TABLE 5

LEVEL IND.	D5201	R5326
-YES-	AK04 11EQS04 1S4	2.2
-NO-	AU01Z 10ELS2	SHORT

#DIFFERENCE TABLE 6

SURGE	VA5003
PHILIPS 110-240V	YES
OTHER	NO

NOTES:UNLESS OTHERWISE SPECIFIED.
ALL RESISTANCE VALUES ARE IN OHMS.
ALL INDUCTANCE VALUES ARE IN H.
ALL CAPACITANCE VALUES ARE IN μF.

ELECTROLYTIC
CERAMIC
MYLER
NON POLAR

p20202001a_rev1

4.6 MAIN (TUNER) SCHEMATIC DIAGRAM

Note : The Parts Number, value and rated voltage etc. in the Schematic Diagram are for references only. When replacing the parts, refer to the Parts List.

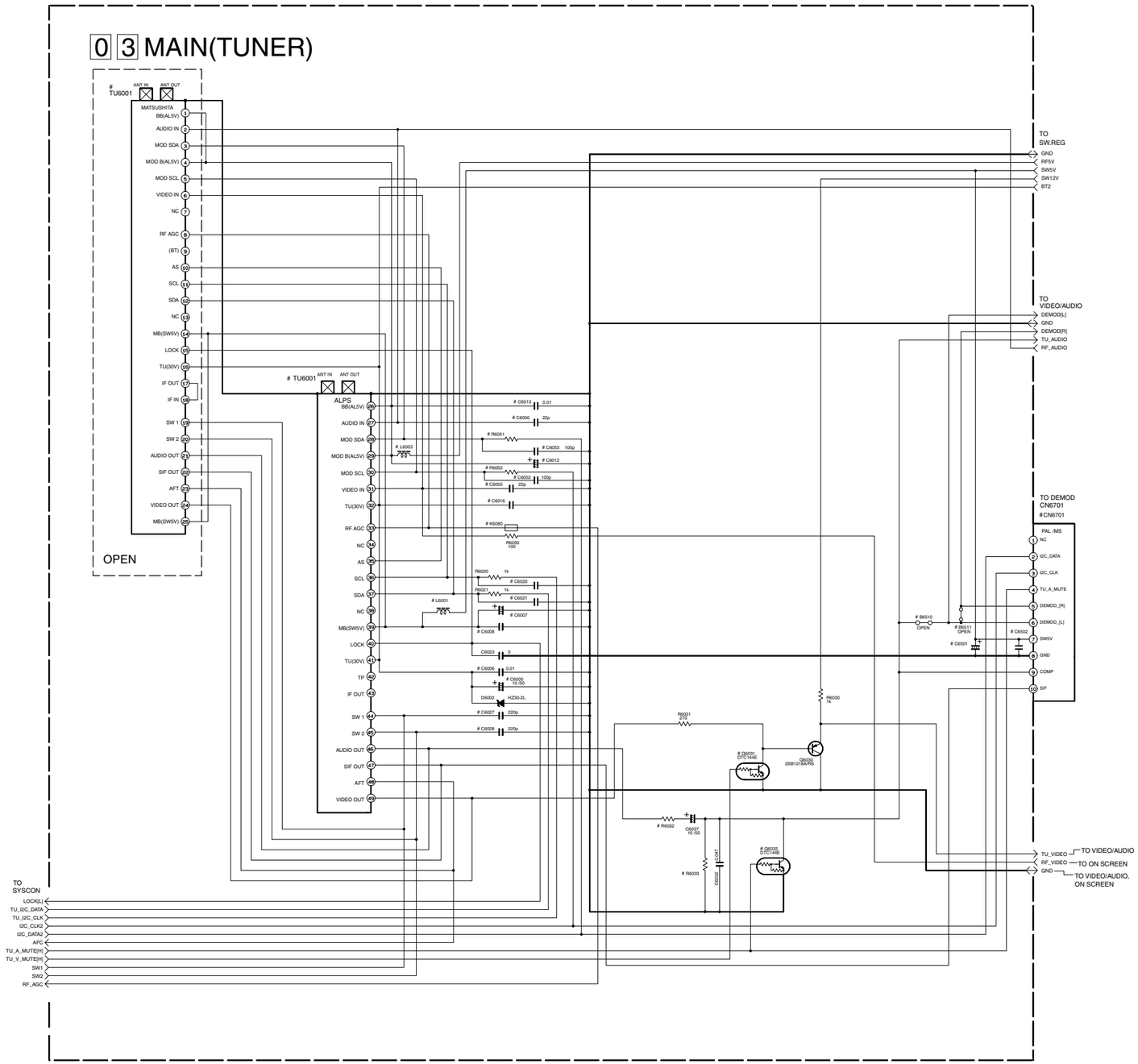

DIFFERENCE TABLE ○ : Used × : Not used

			EU/EK	FRANCE MS	ASIA 33V/STEM	ASIA 45V/STEM	HR-FS1EU
TUNER		TU6001	ALPS	LG	MATSUSHITA	MATSUSHITA	ALPS
			QAU0208	QAU0210	QAU0212	QAU0236	QAU0208
ATS+		K6080	1kΩ	1kΩ	×	×	10kΩ
SW5V		L6001	10μ	10μ	10μ	10μ	10μ
		C6007	220/6.3	220/6.3	220/6.3	220/6.3	220/6.3
		C6008	0.01	×	0.01	0.01	0.01
RF5V		L6003	47μ	47μ	47μ	47μ	10μ
		C6012	100/16	100/16	100/16	100/16	330/6.3
		C6013	0.01	0.01	0.01	0.01	0.01
BT2	RF CONV.	C6016	0.01	×	0.01	0.01	2200p
	TUNER	C6005	×	×	×	×	○
		C6006	×	×	×	×	×
RF CONV.	I2C	R6051	100	×	100	100	470
		C6053	○	×	○	○	×
		R6052	100	×	100	100	470
		C6052	○	×	○	○	○
	AUDIO IN	C6056	×	×	×	×	○
	VIDEO IN	R6050	○	×	○	○	○
		C6055	×	×	×	×	×
TUNER I2C		C6020	×	×	×	×	×
		C6021	×	×	×	×	×
SYSTEM SW		C6027	×	×	×	×	×
		C6028	×	×	×	×	×
AUDIO OUT		R6032	4.7k	18k	18k	0	3.3k
		R6033	1.8k	18k	33k	×	1.5k
		C6032	○	×	○	×	○
		Q6032	○	○	×	×	○
VIDEO OUT		Q6031	○	○	×	×	○
DEMOD PASS CON		C6501	×	×	×	×	×
		C6502	0.01	0.01	0.01	0.01	2200p

NOTES:UNLESS OTHERWISE SPECIFIED.
ALL RESISTANCE VALUES ARE IN OHMS.
ALL INDUCTANCE VALUES ARE IN H.
ALL CAPACITANCE VALUES ARE IN μF.

ELECTROLYTIC
CERAMIC
MYLER
NON POLAR

p10355001a_rev0

4.7 MAIN (SW.DISPLAY), S-JACK AND ADV.JOG SCHEMATIC DIAGRAMS

Note : The Parts Number, value and rated voltage etc. in the Schematic Diagram are for references only. When replacing the parts, refer to the Parts List.

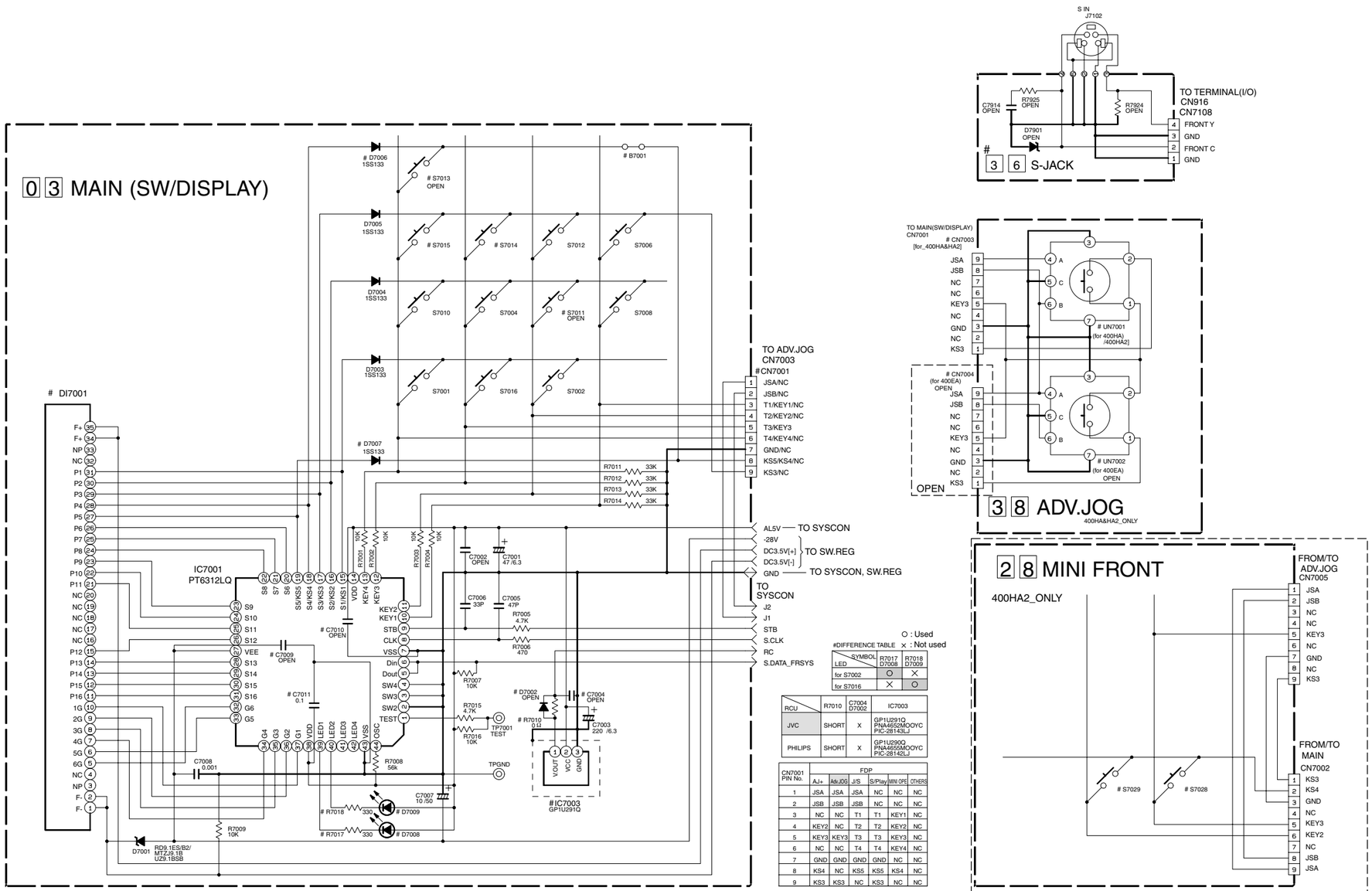

#DIFFERENCE TABLE

	SYMBOL	R7017 D7008	R7018 D7009
LED			
for S7002		O	X
for S7016		X	O

O : Used
X : Not used

RCU	R7010	C7004 D7002	IC7003
JVC	SHORT	X	GP1U291Q PNA4652MOOYC PIC-28143LJ
PHILIPS	SHORT	X	GP1U290Q PNA4655MOOYC PIC-28142LJ

CN7001 PIN No.	FDP AJ+	AdvJOG	J/S	S/Play	MIN OPE	OTHERS
1	JSA	JSA	JSA	NC	NC	NC
2	JSB	JSB	JSB	NC	NC	NC
3	NC	NC	T1	T1	KEY1	NC
4	KEY2	NC	T2	T2	KEY2	NC
5	KEY3	KEY3	T3	T3	KEY3	NC
6	NC	NC	T4	T4	KEY4	NC
7	GND	GND	GND	GND	NC	NC
8	KS4	NC	KS5	KS5	KS4	NC
9	KS3	KS3	NC	KS3	NC	NC

	D7007	B7001	CN7001	S7014 S7015
AJ+	X	O	O	x
AdvJOG	X	X	O	x
J/S	O	X	O	x
S/Play	O	X	O	x
MIN OPE	X	O	O	x
OTHERS	X	X	X	o

#DIFFERENCE TABLE FDP_TYPE

WITHOUT LEVEL_IND	QLF0031-001 OR QLF0033-001
WITH LEVEL_IND	QLF0032-001 OR QLF0034-001

NOTES:UNLESS OTHERWISE SPECIFIED.
ALL RESISTANCE VALUES ARE IN OHMS.
ALL INDUCTANCE VALUES ARE IN H.
ALL CAPACITANCE VALUES ARE IN μF.

ELECTROLYTIC
CERAMIC
MYLER
NON POLAR

p20218001a_rev0

4.8 MAIN (MAIN TERMINAL) SCHEMATIC DIAGRAM

Note : The Parts Number, value and rated voltage etc. in the Schematic Diagram are for references only. When replacing the parts, refer to the Parts List.

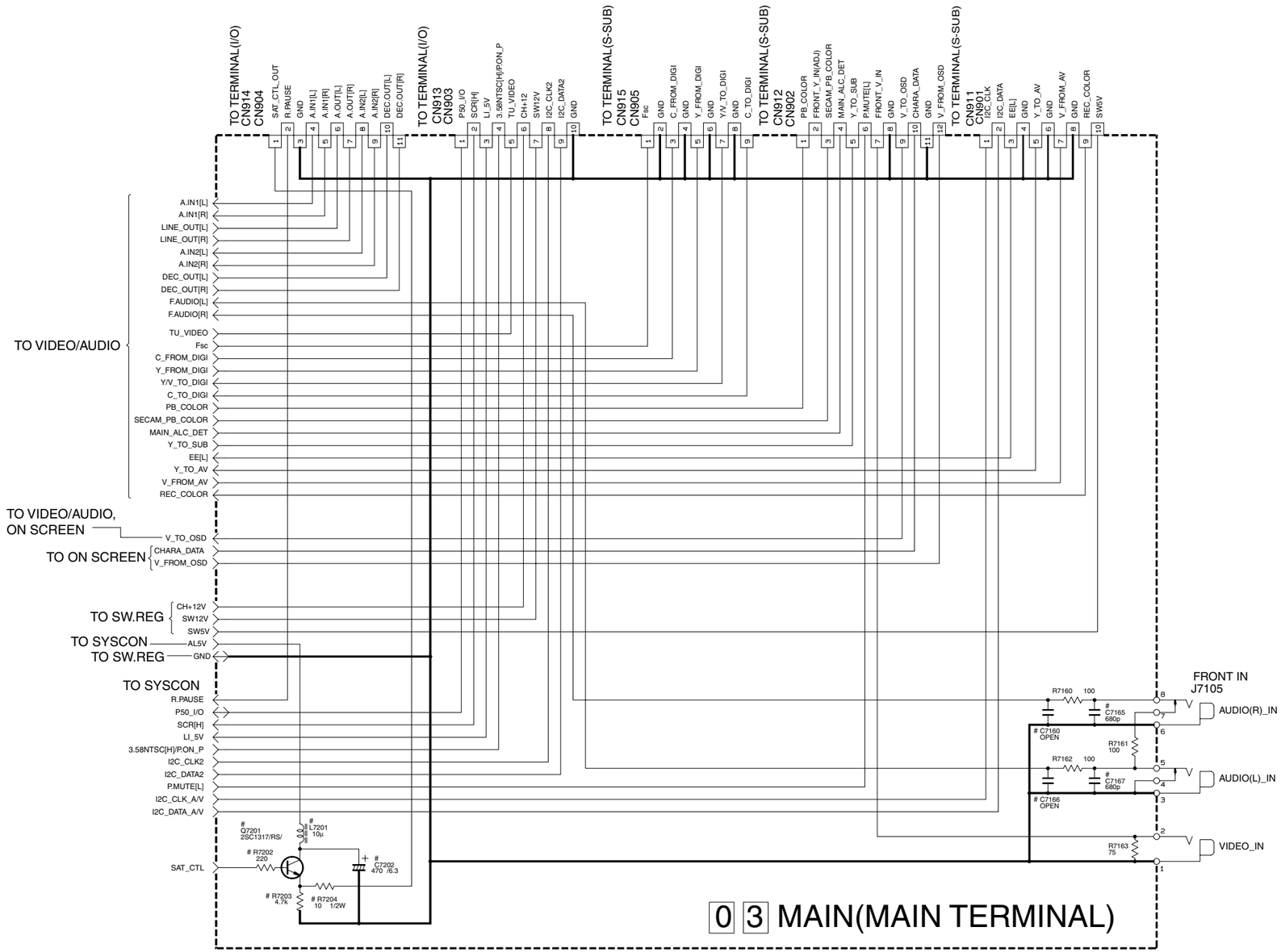

NOTES:UNLESS OTHERWISE SPECIFIED.
ALL RESISTANCE VALUES ARE IN OHMS.
ALL INDUCTANCE VALUES ARE IN H.
ALL CAPACITANCE VALUES ARE IN μF.

ELECTROLYTIC
CERAMIC
MYLER
NON POLAR

DIFFERENCE TABLE

SAT CTL	Q7201 R7202 R7203 R7204 C7202 L7201
YES	○
NO	×

○ : Used
× : Not used

CE	C7165 C7167
YES	○
NO	×

p30089001a_rev0

4.9 2D DIGITAL SCHEMATIC DIAGRAM

Note : The Parts Number, value and rated voltage etc. in the Schematic Diagram are for references only. When replacing the parts, refer to the Parts List.

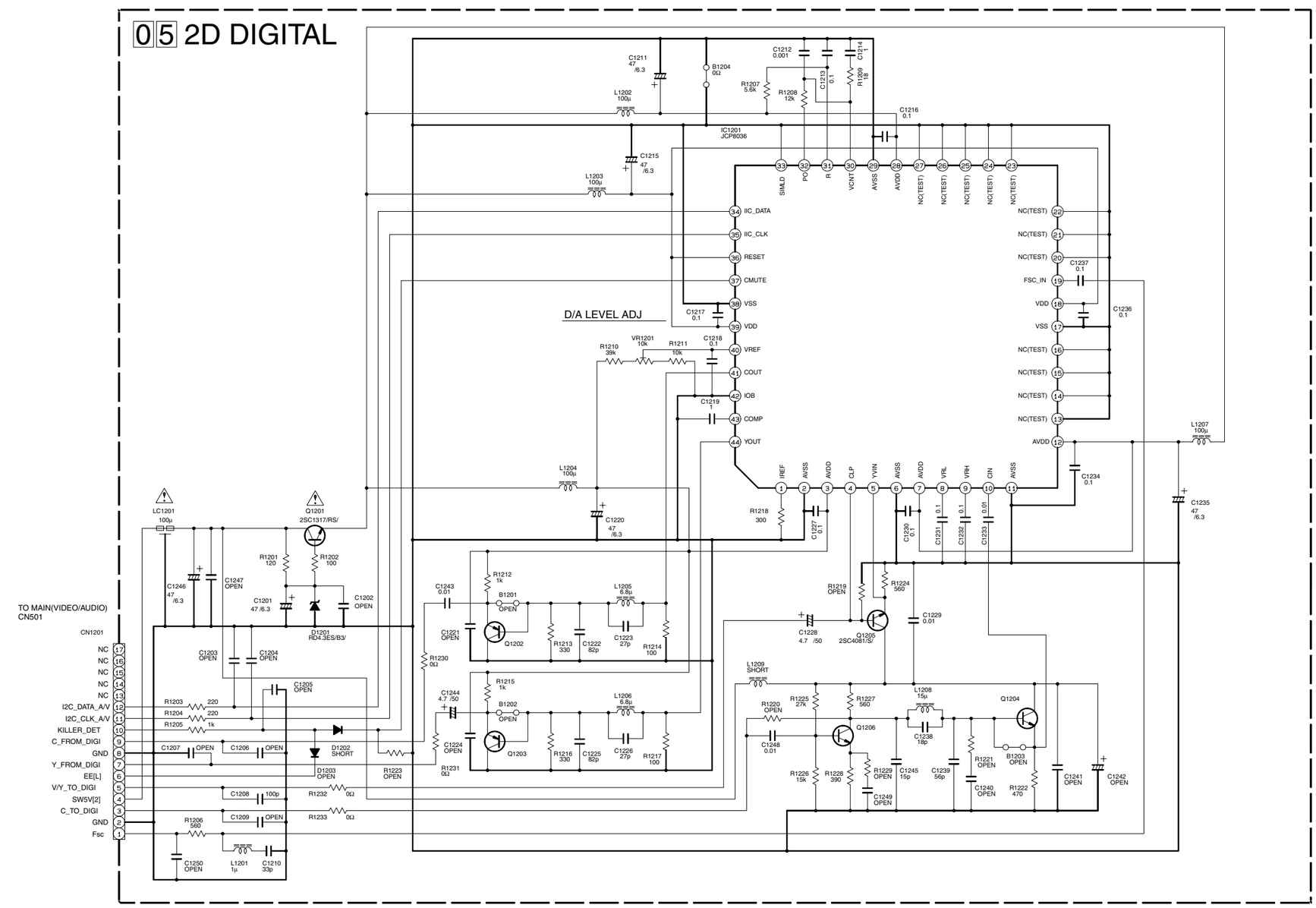

ALL NPN TYPE TRANSISTORS ARE 2SC4081/QRS/ or 2SD1819A/QRS/ or 2PC4081/R/.
ALL PNP TYPE TRANSISTORS ARE 2SA1576A/QR/ or 2SB1218A/QR/ or 2PA1576/R/.

NOTES:UNLESS OTHERWISE SPECIFIED.
ALL RESISTANCE VALUES ARE IN OHMS.
ALL INDUCTANCE VALUES ARE IN H.
ALL CAPACITANCE VALUES ARE IN μF.

ELECTROLYTIC
CERAMIC
MYLER
NON POLAR

p20216001a_rev0

4.10 TERMINAL (S-SUB) SCHEMATIC DIAGRAM

Note : The Parts Number, value and rated voltage etc. in the Schematic Diagram are for references only. When replacing the parts, refer to the Parts List.

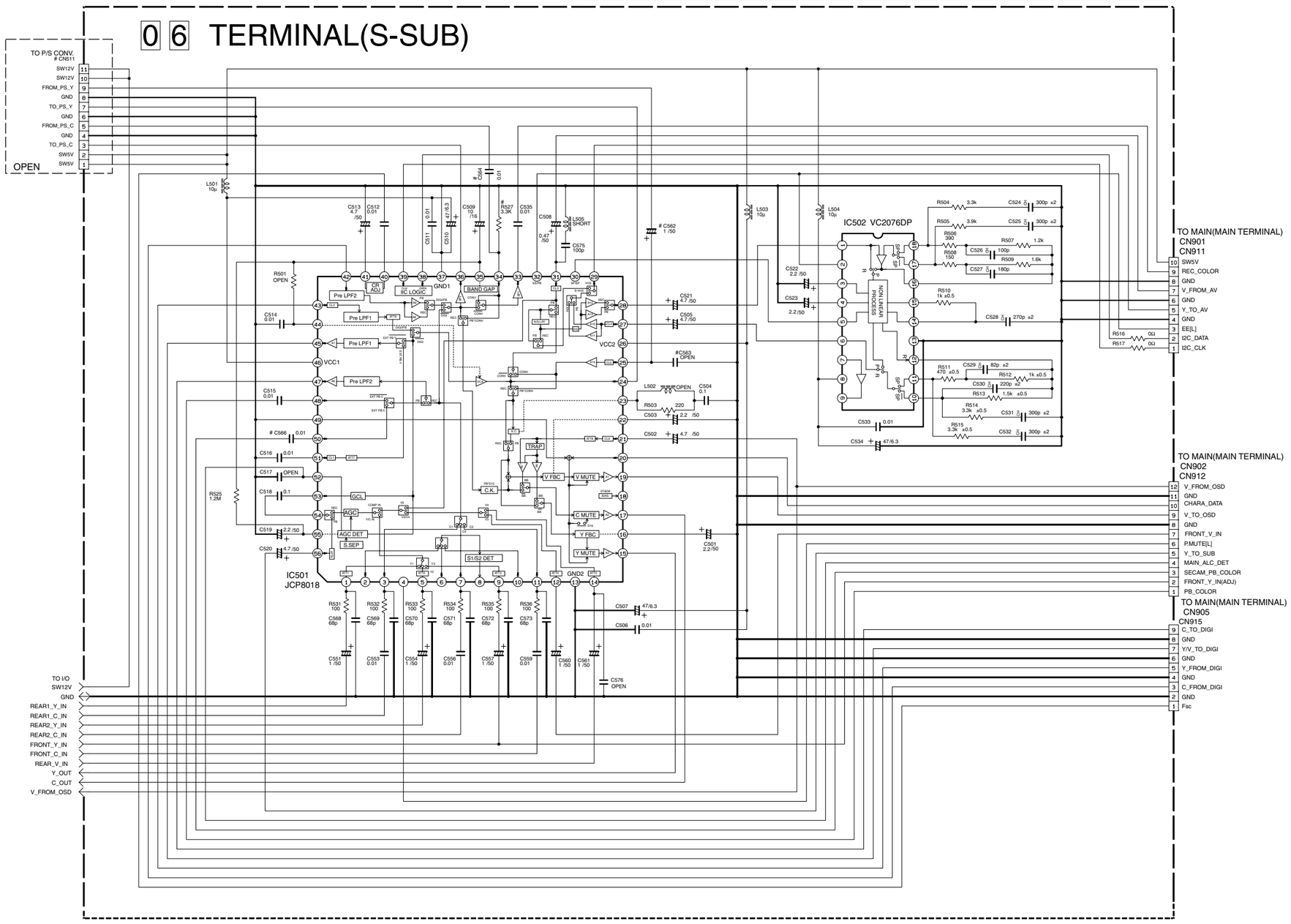

DIFFERENCE TABLE

○ : Used
× : Not used

	CN511 C562 C564 C566	C563 R527
MS	○	×
OTHERS	×	○

NOTES:UNLESS OTHERWISE SPECIFIED.
ALL RESISTANCE VALUES ARE IN OHMS.
ALL INDUCTANCE VALUES ARE IN H.
ALL CAPACITANCE VALUES ARE IN μF.

ELECTROLYTIC
CERAMIC
MYLER
NON POLAR

p20213001a_rev0

4.11 TERMINAL (I/O) SCHEMATIC DIAGRAM

Note : The Parts Number, value and rated voltage etc. in the Schematic Diagram are for references only. When replacing the parts, refer to the Parts List.

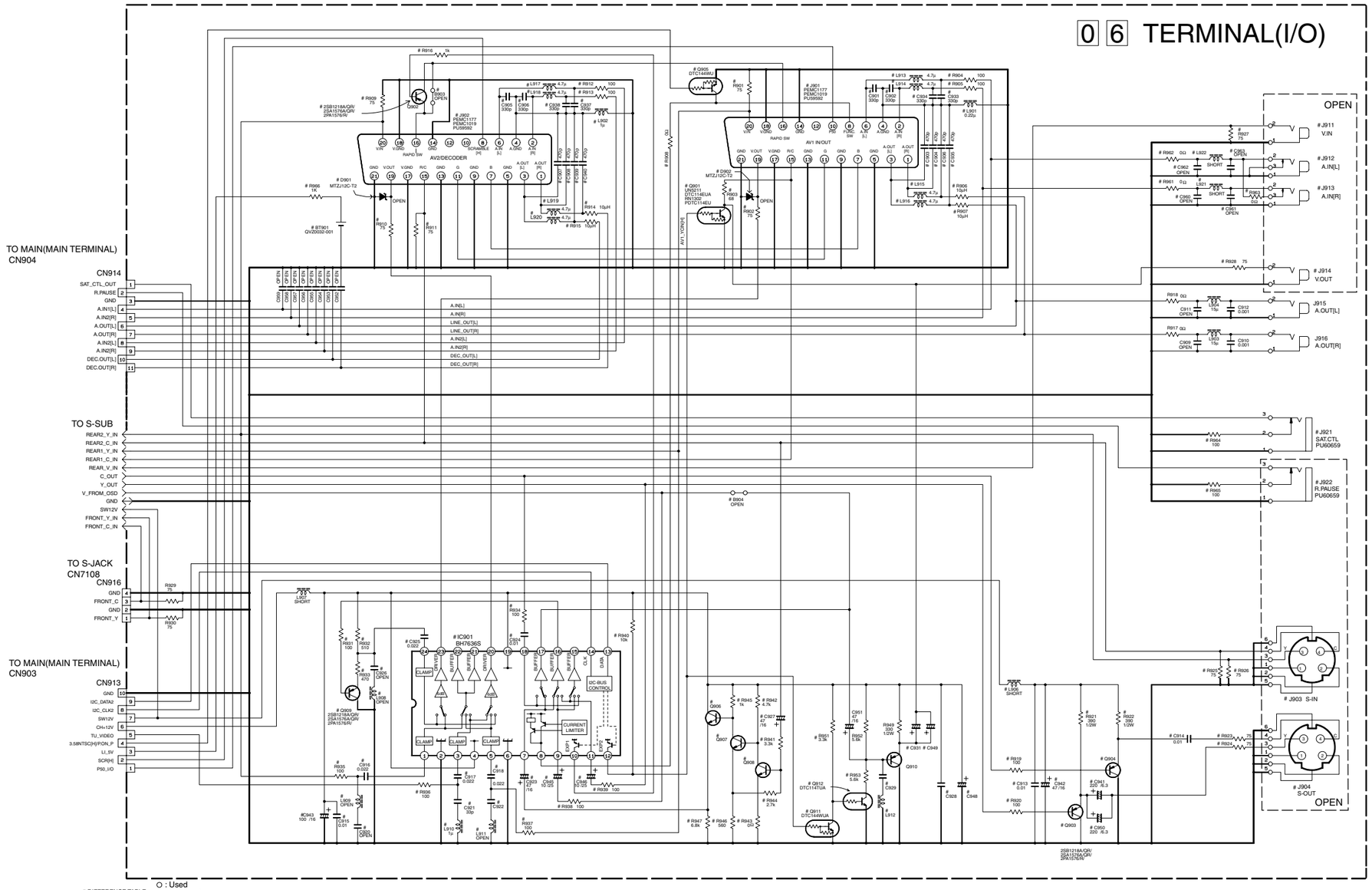

DIFFERENCE TABLE

○ : Used
× : Not used

		CH+	REAR S-OUT	S-IN	REAR IN/OUT	SAT CTL	R.PAUSE	SW12VDECUP				CE/V-OUT DRIVER				BACK UP
		R901-R908, R909-R916, R931-R947, R951,R953 L901,L902 L908-L911, L913-L916, L917-L920, IC901 B903,B904 D901,D902 J901,J902	J904 R919-R924 C913,C914 C941,C942 C950 Q903,Q904 L906	J903 R925,R926	J911-J914 R927,R928 R961-R963 L921,L922 C960-C963	J921 R964	J922 R965	C915	C943	C928	C948	C929	L912	C931	C949	R966 BT901
EURO MODELS	WITHOUT REAR S-OUT	○	×	×	×	○	×	0.01	100/16	0.01	OPEN	OPEN	OPEN	10/25	OPEN	×
	WITH REAR S-OUT	○	○	×	×	○	○	0.01	100/16	0.01	OPEN	OPEN	OPEN	10/25	OPEN	×
ARC MODELS		×	○	○	○	×	×	OPEN	OPEN	0.01	47/16	5.6k	SHORT	220/6.3	220/6.3	○

ALL NPN TYPE TRANSISTORS ARE 2SC4081/QRS/ or 2SD1819A/QRS/ or 2PC4081/R/.
ALL PNP TYPE TRANSISTORS ARE 2SA1576A/QR/ or 2SB1218A/QR/ or 2PA1576/R/.

NOTES:UNLESS OTHERWISE SPECIFIED.
ALL RESISTANCE VALUES ARE IN OHMS.
ALL INDUCTANCE VALUES ARE IN H.
ALL CAPACITANCE VALUES ARE IN μF.

ELECTROLYTIC
CERAMIC
MYLER
NON POLAR

p20212001a_rev0

4.12 DEMODULATOR SCHEMATIC DIAGRAM

Note : The Parts Number, value and rated voltage etc. in the Schematic Diagram are for references only. When replacing the parts, refer to the Parts List.

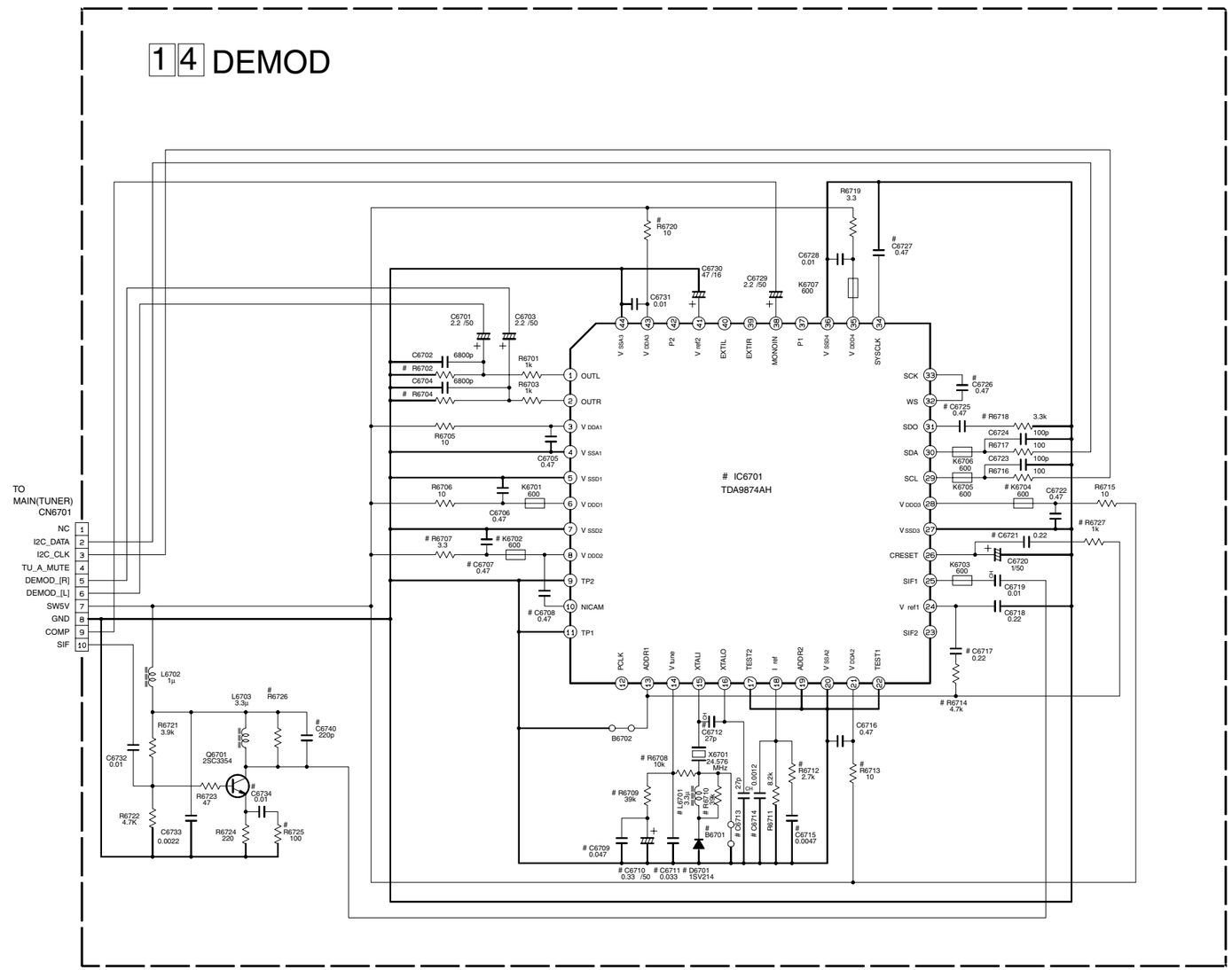

NOTES:UNLESS OTHERWISE SPECIFIED.
ALL RESISTANCE VALUES ARE IN OHMS.
ALL INDUCTANCE VALUES ARE IN H.
ALL CAPACITANCE VALUES ARE IN μF.

ELECTROLYTIC
CERAMIC
MYLER
NON POLAR

DIFFERENCE TABLE

	V12 EK/ARC	V12 EU/MS	V13/V14
IC6701	TDA9874H	←	TDA9874AH
R6707	10	←	NOT USED
R6708	10k	←	0Ω
R6709	39k	←	NOT USED
R6710	39k	←	NOT USED
R6713	10	←	NOT USED
R6720	10	←	NOT USED
R6725	100	NOT USED	100
R6726	1k	2.2k	1k
C6707	0.47	←	NOT USED
C6710	0.33/50	←	NOT USED
C6711	0.033	←	NOT USED
C6712	27p	←	NOT USED
C6713	27p	←	0Ω
C6714	0.0012	←	NOT USED
C6734	0.01	NOT USED	0.01
C6740	NOT USED	220p	NOT USED
L6701	3.3μ	←	NOT USED
D6701	1SV214	←	NOT USED
K6702	600	←	NOT USED
R6702,R6704, R6712,R6714, R6717,R6718, C6708,C6709, C6715,C6717, C6721,C6725, C6726,C6727, B6701	NOT USED	←	←

p20130001a_rev1

COMPONENT PARTS LOCATION GUIDE <MAIN>

REF.NO.	LOCATION
CAPACITOR	
C1	B C 14N
C2	B C 14N
C3	B C 14N
C4	B C 14O
C5	A D 15N
C6	A D 13N
C7	B C 14P
C8	B C 14P
C9	A D 9N
C10	B C 12N
C11	B C 11O
C12	B C 11O
C13	B C 11N
C14	B C 11N
C15	B C 11N
C16	B C 11N
C17	A D 10N
C19	A D 10M
C20	A D 9M
C21	B C 11M
C22	A D 11M
C23	B C 11N
C24	A D 10M
C25	B C 11M
C26	B C 11L
C27	B C 10M
C28	A D 10M
C29	B C 11L
C30	B C 10L
C31	A D 10L
C32	A D 11L
C33	A D 11L
C34	B C 10L
C35	B C 11K
C36	A D 11K
C37	A D 12K
C38	A D 11K
C39	B C 12K
C40	A D 12J
C44	B C 15N
C45	A D 12L
C46	B C 11K
C47	A D 10M
C56	B C 10K
C59	B C 8M
C60	A D 7M
C61	B C 12O
C63	B C 10N
C64	B C 9L
C65	A D 12O
C69	B C 16N
C70	B C 16N
C71	B C 8L
C72	B C 8L
C73	B C 7M
C74	B C 7M
C75	B C 8L
C76	B C 9K
C77	B C 8K
C78	B C 8K
C80	B C 10M
C82	B C 10N
C84	B C 11O
C93	B C 8L
C103	B C 8L
C106	B C 10N
C108	B C 10K
C109	B C 10O
C110	B C 10N
C112	B C 10K
C114	B C 10K
C124	B C 8K
C139	B C 11O
C140	B C 11J
C141	A D 7H
C142	B C 20H
C143	A D 12L
C201	A D 20G
C202	B C 19G
C204	B C 19G
C206	B C 19G
C207	B C 19G
C208	B C 18G
C209	B C 18H
C210	B C 18G
C211	B C 18G
C212	B C 18G
C213	A D 18F
C214	B C 18G
C215	B C 18G
C216	A D 17H
C217	B C 19H
C218	A D 19H
C222	B C 19G
C225	A D 17F
C301	B C 7K
C302	B C 7K
C303	B C 7J
C304	B C 7J
C305	B C 7K
C306	B C 7K
C307	B C 6K
C308	B C 6L
C309	B C 6J
C310	B C 6J
C311	B C 6J
C312	B C 6J
C313	B C 6J
C314	B C 6J

REF.NO.	LOCATION
C315	B C 6J
C316	B C 6J
C317	B C 6J
C318	B C 7J
C319	B C 7I
C320	B C 8J
C321	B C 7J
C322	B C 7J
C323	A D 7L
C324	B C 6K
C401	B C 15O
C402	B C 15O
C403	B C 15O
C404	B C 16O
C405	B C 16O
C406	B C 16O
C407	B C 16O
C409	A D 17O
C2001	A D 13K
C2002	A D 14L
C2003	A D 14N
C2004	B C 14N
C2005	A D 13N
C2006	B C 13O
C2007	A D 13O
C2008	A D 13O
C2009	B C 13O
C2010	B C 13O
C2011	A D 12O
C2012	A D 12O
C2013	B C 13N
C2014	B C 12K
C2015	B C 13O
C2016	B C 13O
C2017	A D 11O
C2051	B C 9O
C2052	A D 9O
C2053	B C 10P
C2054	B C 9P
C2055	A D 10O
C2061	A D 19K
C2062	B C 6M
C2063	B C 6L
C2064	A D 6L
C2201	B C 12K
C2202	B C 12K
C2203	A D 12K
C2204	A D 11K
C2205	A D 13K
C2206	A D 13J
C2207	A D 12J
C2208	A D 13K
C2209	A D 13K
C2210	A D 13K
C2211	A D 14K
C2212	A D 14K
C2213	A D 13L
C2214	A D 14L
C2215	A D 13L
C2216	A D 13L
C2217	A D 13L
C2218	A D 14L
C2219	A D 15L
C2220	A D 15L
C2221	B C 14M
C2222	A D 15L
C2223	A D 15L
C2224	B C 15L
C2225	A D 15L
C2226	A D 14M
C2227	B C 14M
C2228	B C 14M
C2229	B C 13L
C2230	B C 15K
C2231	B C 12L
C2251	A D 14N
C2252	B C 14N
C2253	B C 15N
C2254	B C 15N
C2255	B C 16M
C3001	B C 7N
C3002	B C 6M
C3003	A D 6M
C3004	B C 6L
C3007	B C 4I
C3008	B C 19J
C3010	A D 2D
C3011	A D 2D
C3012	A D 6B
C3014	A D 8E
C3015	B C 10E
C3016	B C 12E
C3017	B C 13E
C3018	B C 13D
C3020	B C 13E
C3021	B C 13E
C3022	B C 19E
C3024	B C 13F
C3025	A D 13F
C3026	B C 13F
C3027	A D 14E
C3028	A D 13E
C3029	A D 13E
C3030	A D 14E
C3031	B C 14F
C3032	B C 11G
C3033	B C 10F
C3034	B C 13G
C3035	B C 13G
C3036	B C 12F
C3037	B C 13F

REF.NO.	LOCATION
C3038	B C 11G
C3039	B C 11G
C3040	B C 12D
C3041	B C 13F
C3042	A D 4D
C3049	B C 11D
C3050	B C 12F
C3054	B C 14F
C4001	A D 8E
C4002	B C 10E
C4003	B C 9D
C4004	A D 8G
C4005	B C 8F
C4006	A D 8G
C4007	B C 9E
C4008	B C 9E
C4009	B C 9D
C4010	B C 8F
C4011	B C 10G
C4012	B C 10H
C4013	B C 10F
C4014	B C 10F
C4015	B C 9E
C4016	A D 9G
C4017	B C 9G
C4031	A D 19M
C4032	B C 20N
C5001	A D 1P
C5002	A D 2N
C5003	A D 4P
C5004	A D 1J
C5006	A D 2M
C5101	A D 2M
C5102	A D 2K
C5103	B C 3L
C5104	A D 3M
C5105	A D 3L
C5106	A D 3K
C5107	A D 3K
C5201	A D 1H
C5202	A D 3G
C5203	A D 2G
C5204	A D 3H
C5205	A D 2H
C5206	A D 2F
C5207	A D 2F
C5208	A D 3G
C5301	A D 3E
C5302	A D 3E
C5303	A D 4E
C5304	A D 2E
C5305	A D 3F
C5306	A D 4G
C5307	A D 3E
C5308	A D 3E
C5309	A D 4E
C5310	A D 5F
C5311	B C 1E
C5351	A D 1F
C5352	A D 1F
C6005	A D 21M
C6006	B C 21M
C6007	A D 21N
C6008	B C 21M
C6012	A D 21P
C6013	B C 21P
C6016	B C 22O
C6020	B C 22N
C6021	B C 22N
C6023	B C 21M
C6027	B C 22L
C6028	B C 22L
C6032	B C 21L
C6037	A D 21L
C6052	B C 22O
C6053	B C 22P
C6055	B C 22O
C6056	B C 22P
C6501	A D 22G
C6502	B C 22G
C7001	A D 7B
C7002	A D 11A
C7003	A D 9B
C7004	B C 8A
C7005	B C 11B
C7006	B C 11B
C7007	A D 14B
C7008	B C 13A
C7009	A D 12C
C7010	A D 11A
C7011	A D 13B
C7160	B C 19B
C7165	B C 19A
C7166	B C 20B
C7167	B C 20A
C7202	A D 19N
CONNECTOR	
CN1	A D 14O
CN501	A D 21H
CN901	A D 6P
CN902	A D 10P
CN903	A D 14P
CN904	A D 17P
CN905	A D 20P
CN2001	A D 9O
CN2002	A D 19L
CN3001	A D 20M
CN3002	A D 7N
CN3003	A D 7L
CN3004	A D 9F

REF.NO.	LOCATION
CN3006	A D 3D
CN3901	A D 8B
CN5001	A D 1P
CN6701	A D 22F
CN7001	A D 2C
DIODE	
D1	B C 16P
D6	A D 13J
D8	B C 9J
D11	B C 10K
D201	A D 19F
D202	A D 19F
D203	A D 18F
D2201	A D 12J
D2202	A D 12J
D3001	A D 12H
D3002	A D 7F
D3003	A D 6C
D3004	A D 5C
D3005	A D 5C
D3006	A D 5D
D3008	B C 11D
D4001	A D 10H
D4002	A D 10H
D5001	B C 2M
D5101	A D 1M
D5102	A D 2K
D5103	A D 3K
D5105	A D 3K
D5201	A D 1I
D5202	A D 3H
D5203	A D 3I
D5204	A D 3I
D5205	A D 3I
D5206	A D 2H
D5208	A D 2I
D5209	A D 4H
D5210	A D 4H
D5211	A D 1H
D5301	A D 3I
D5302	A D 3F
D5303	A D 2E
D5304	A D 2E
D5305	A D 2F
D5306	A D 4D
D5307	A D 4G
D5308	A D 4D
D5309	A D 1E
D5310	A D 2E
D5316	A D 5G
D5317	A D 5E
D5318	A D 6G
D5319	A D 5G
D6002	A D 22O
D7001	A D 15A
D7002	A D 8A
D7003	A D 10A
D7004	A D 7A
D7005	A D 6A
D7006	A D 5A
D7007	A D 2B
D7008	A D 16A
D7009	A D 16A
IC	
IC1	B C 12M
IC2	B C 8L
IC4	B C 8H
IC201	A D 19G
IC301	A D 7J
IC3001	B C 11F
IC3002	B C 14F
IC3003	B C 20E
IC3004	A D 5M
IC5301	A D 4F
IC7001	B C 12B
IC7003	A D 8A
JACK	
J7105	A D 20A
COIL	
L1	A D 16N
L2	A D 12O
L3	A D 9M
L4	A D 10L
L5	A D 12K
L11	A D 11M
L12	A D 11L
L13	A D 9L
L15	A D 7N
L17	A D 8L
L18	A D 8L
L19	A D 7M
L20	A D 11N
L24	A D 10N
L27	A D 10L
L28	A D 10N
L30	A D 11K
L31	A D 20H
L201	A D 20H
L202	A D 20G
L203	A D 19F
L204	A D 17H
L206	A D 18H
L301	A D 7K
L302	A D 6K
L303	A D 6J
L304	A D 6K
L401	A D 16O
L402	A D 16O
L2001	A D 16M

REF.NO.	LOCATION
L2251	A D 15M
L2252	A D 15M
L3001	A D 6M
L3011	A D 6N
L3012	A D 7N
L4001	A D 19M
L5201	A D 3G
L5202	A D 2F
L5301	A D 4D
L6001	A D 21N
L6003	A D 21O
L7201	A D 18N
TRANSISTOR	
Q1	B C 14N
Q2	B C 15N
Q3	B C 14O
Q4	B C 14O
Q5	B C 8M
Q6	B C 8M
Q7	B C 8M
Q8	B C 7M
Q9	B C 7M
Q10	B C 11K
Q11	B C 11L
Q14	B C 8K
Q16	B C 11O
Q17	B C 11O
Q18	B C 10N
Q21	B C 9L
Q24	B C 10J
Q25	B C 10K
Q26	B C 10K
Q28	B C 9N
Q38	B C 9N
Q39	B C 10K
Q40	B C 10K
Q41	B C 9K
Q207	B C 18H
Q208	B C 18H
Q301	B C 6K
Q302	B C 8J
Q303	B C 6K
Q311	B C 7J
Q312	B C 8K
Q401	B C 15O
Q402	B C 16O
Q403	B C 17O
Q404	B C 16N
Q405	B C 16O
Q2001	B C 12O
Q2002	B C 13O
Q2003	B C 12O
Q2004	B C 13O
Q2005	B C 14O
Q2006	B C 10O
Q2051	B C 10P
Q2052	B C 10P
Q2053	B C 11P
Q2054	B C 11P
Q2055	B C 11P
Q2061	B C 6M
Q2062	B C 6M
Q2063	B C 7M
Q2251	B C 15M
Q2252	B C 16M
Q3001	B C 5M
Q3002	A D 4I
Q3003	A D 19I
Q3004	B C 6C
Q3005	B C 6C
Q3007	B C 11D
Q3901	B C 14E
Q4001	B C 8F
Q4002	B C 9G
Q4003	B C 9G
Q5101	A D 2L
Q5102	A D 3L
Q5301	A D 4G
Q5302	A D 2E
Q5303	B C 2E
Q5304	A D 4E
Q5305	B C 3E
Q5306	B C 3F
Q5307	A D 3F
Q5308	B C 4H
Q5309	A D 4F
Q5310	B C 4E
Q5311	B C 5G
Q5312	A D 1F
Q5318	B C 2F
Q5319	B C 1E
Q5320	B C 5E
Q5322	B C 5G
Q5323	A D 3G
Q6030	B C 21K
Q6031	B C 21K
Q6032	B C 22G
Q7201	A D 19N
RESISTOR	
R1	B C 12N
R2	B C 11O
R3	B C 11O
R4	B C 9M
R5	B C 10M
R6	B C 10M
R7	B C 11L
R8	B C 11J
R9	B C 13J
R21	B C 16O
R22	B C 16N

REF.NO.	LOCATION
R23	B C 8M
R24	B C 8L
R25	B C 7M
R26	B C 7M
R27	B C 8M
R28	B C 8L
R29	B C 8M
R30	B C 7M
R31	B C 7M
R32	B C 7M
R33	B C 11N
R35	B C 11O
R36	B C 11J
R37	B C 11K
R38	B C 11L
R39	B C 10K
R40	B C 10K
R41	B C 10K
R42	B C 10K
R46	B C 9L
R48	A D 10L
R51	B C 11J
R54	B C 10N
R62	B C 10N
R65	B C 8K
R68	B C 8K
R70	B C 10N
R75	B C 11N
R77	B C 14P
R79	B C 12K
R88	B C 11J
R90	B C 11N
R91	B C 9J
R92	B C 10N
R93	B C 10N
R104	B C 10N
R111	B C 10L
R113	B C 11O
R117	B C 10K
R118	B C 12K
R201	B C 20G
R202	B C 18F
R203	B C 18F
R204	B C 18F
R208	B C 19F
R209	B C 18G
R210	B C 17G
R211	B C 18G
R212	B C 18H
R213	A D 19H
R216	B C 19G
R220	B C 19H
R224	B C 18H
R225	B C 18H
R226	B C 20F
R301	B C 7K
R302	B C 7K
R303	B C 6K
R304	B C 7K
R305	B C 6K
R306	B C 7J
R307	B C 6K
R308	B C 6J
R309	B C 6J
R310	B C 6J
R311	B C 7J
R312	B C 7J
R313	B C 8J
R314	B C 8J
R315	B C 8J
R316	B C 7J
R317	B C 6L
R318	B C 6K
R321	B C 7K
R326	B C 7J
R327	B C 7J
R328	B C 6J
R329	B C 7J
R401	B C 15O
R402	B C 16O
R403	B C 16O
R404	B C 16O
R405	B C 16O
R406	B C 16O
R407	B C 16N
R408	B C 17O
R2001	B C 14J
R2002	B C 14K
R2003	B C 14K
R2005	B C 15K
R2006	B C 15K
R2007	B C 15K
R2008	B C 14L
R2009	B C 14L
R2010	B C 14L
R2013	B C 13O
R2014	B C 13O
R2015	B C 13O
R2016	B C 13O
R2017	B C 13O
R2018	B C 12O
R2019	B C 12O
R2020	B C 13O
R2021	B C 13O
R2022	B C 10O
R2023	B C 10O
R2051	B C 9O
R2052	B C 9O
R2053	B C 9O
R2054	B C 10P
R2055	B C 9P

REF.NO.	LOCATION
R2056	B C 10P
R2057	B C 11P
R2058	B C 11P
R2059	B C 11P
R2060	B C 11P
R2061	B C 6M
R2062	B C 6L
R2063	B C 6M
R2064	B C 7M
R2065	B C 7M
R2201	A D 13J
R2202	B C 14K
R2203	B C 13K
R2204	B C 14K
R2205	B C 14K
R2206	B C 14K
R2208	B C 13K
R2209	B C 14K
R2210	B C 13L
R2211	B C 14K
R2213	B C 15K
R2215	B C 14L
R2217	B C 15K
R2218	B C 15L
R2219	B C 15L
R2220	B C 15L
R2222	B C 15K
R2223	B C 14L
R2224	B C 15L
R2225	B C 15L
R2226	B C 15L
R2227	B C 14L
R2228	B C 12K
R2229	B C 12K
R2251	B C 16M
R3011	B C 9D
R3012	B C 9D
R3013	B C 10E
R3014	B C 9D
R3015	B C 10D
R3016	B C 10D
R3017	B C 9D
R3018	B C 9D
R3019	B C 10D
R3020	B C 10D
R3021	B C 10D
R3022	B C 10D
R3025	B C 11D
R3026	B C 11D
R3027	B C 9C
R3029	B C 11D
R3030	B C 11D
R3031	B C 11D
R3032	B C 11D
R3033	B C 11D
R3034	B C 9C
R3035	B C 9C
R3036	B C 9C
R3038	B C 12D
R3039	B C 12D
R3040	B C 12D
R3041	B C 12D
R3042	B C 14C
R3044	B C 15D
R3046	B C 13D
R3047	B C 12E
R3048	B C 14D
R3049	B C 12E
R3050	B C 12E
R3051	B C 12E
R3052	B C 13E
R3053	B C 12E
R3054	B C 15D
R3055	B C 13E
R3056	B C 13E
R3057	B C 14E
R3058	B C 14E
R3059	B C 14E
R3060	B C 13F
R3061	B C 13F
R3062	B C 14E
R3063	B C 14E
R3066	B C 13F
R3069	B C 12F
R3071	B C 14F
R3072	B C 14F
R3073	B C 14F
R3074	B C 12G
R3075	B C 12G
R3076	B C 12G
R3077	B C 13G
R3078	B C 12G
R3079	B C 12G
R3080	B C 11G
R3081	B C 12G
R3083	B C 11G
R3085	B C 11G
R3086	B C 11G
R3087	B C 12G
R3088	B C 11G
R3089	B C 11G
R3090	B C 11G
R3091	B C 10G
R3092	B C 10G
R3093	B C 10G
R3094	B C 10I
R3095	B C 14J
R3096	B C 10G
R3097	B C 10I
R3103	B C 9G
R3104	B C 9G

REF.NO.	LOCATION
R3105	B C 9G
R3106	B C 9G
R3201	B C 5M
R3202	B C 5M
R3203	B C 5M
R3204	B C 5N
R3205	A D 12I
R3206	B C 8D
R3207	A D 17D
R3208	B C 16E
R3209	B C 16E
R3210	B C 8G
R3211	B C 8G
R3212	A D 7F
R3213	B C 8D
R3214	B C 8D
R3215	B C 8D
R3216	B C 8D
R3217	A D 7D
R3218	A D 6E
R3219	B C 6C
R3220	B C 6C
R3222	B C 6B
R3223	B C 20E
R3224	B C 20E
R3225	B C 17D
R3229	B C 12F
R3230	B C 13F
R3231	B C 14F
R3233	B C 14C
R3234	B C 11D
R3235	B C 7C
R3236	B C 7C
R3237	B C 6B
R3238	B C 6B
R3239	B C 21E
R3240	B C 21E
R3241	A D 7B
R3242	B C 9D
R3246	B C 10D
R3247	B C 10D
R3252	B C 9D
R4001	B C 9H
R4003	B C 9E
R4004	B C 9E
R4005	B C 9E
R4006	B C 9E
R4007	B C 9E
R4008	B C 11D
R4009	B C 10G
R4010	B C 10G
R4011	B C 10H
R4012	B C 10G
R4013	B C 9F
R4015	B C 9H
R4016	B C 10G
R4017	B C 10F
R4018	B C 10F
R4019	B C 10G
R4020	B C 9G
R4021	B C 9G
R5101	A D 3M
R5102	A D 3M
R5103	A D 3M
R5104	A D 1L
R5106	A D 1L
R5107	A D 3K
R5108	B C 3L
R5109	A D 3L
R5110	B C 2L
R5111	B C 3K
R5112	B C 3K
R5301	B C 4H
R5302	B C 4H
R5303	B C 4H
R5304	B C 4I
R5305	B C 2E
R5306	B C 2E
R5307	B C 4H
R5308	B C 2E
R5309	B C 2E
R5310	B C 4E
R5311	B C 3E
R5312	B C 2F
R5313	B C 3F
R5314	B C 4F
R5315	B C 3F
R5316	B C 4F
R5317	B C 4H
R5318	A D 1F
R5319	B C 3E
R5320	B C 4H
R5321	B C 4F
R5322	B C 4E
R5323	B C 4E
R5324	B C 4G
R5325	A D 4G
R5326	A D 1F
R5327	B C 1F
R5328	B C 1F
R5329	B C 2F
R5330	B C 1H
R5332	A D 3H
R5344	B C 3G
R5345	A D 4G
R6020	B C 21N
R6021	B C 21N
R6030	B C 21K
R6031	B C 21K
R6032	B C 21L
R6033	B C 21L

REF.NO.	LOCATION
R6050	A D 21O
R6051	B C 21P
R6052	B C 21O
R7001	B C 11A
R7002	B C 11B
R7003	B C 11B
R7004	B C 11B
R7005	B C 11B
R7006	B C 11B
R7007	A D 14B
R7008	A D 14B
R7009	A D 3A
R7010	B C 8A
R7011	B C 11A
R7012	B C 10A
R7013	B C 11B
R7014	B C 10B
R7015	A D 11B
R7016	B C 7B
R7017	B C 15A
R7018	B C 15A
R7160	B C 19B
R7161	B C 19A
R7162	B C 20B
R7163	B C 21B
R7202	B C 18N
R7203	B C 19N
R7204	A D 18N
SWITCH	
S3001	A D 18C
S3002	A D 6F
S7001	A D 22B
S7002	A D 18B
S7004	A D 7B
S7006	A D 6B
S7008	A D 5B
S7010	A D 4B
S7011	A D 4B
S7012	A D 3B
S7013	A D 2B
S7014	A D 2B
S7015	A D 1B
S7016	A D 17B
TEST POINT	
TP106	A D 20K
TP111	A D 20L
TP2253	A D 20K
TP3901	B C 12D
TP3902	B C 12E
TP3903	B C 13E
TP3904	B C 14F
TP3905	B C 13F
TP3906	B C 13E
TP3907	B C 14E
TP3908	B C 14E
TP4001	A D 20K
TP7001	A D 3A
TPGND	A D 4A
OTHER	
CP3002	A D 5J
CP3003	B C 5J
CP4001	A D 19M
CP4002	B C 18M
CP5301	A D 4D
CP5302	A D 4G
CP5303	B C 4D
CP5304	B C 4G
DI7001	A D 12A
F5001	A D 2P
FC5001	A D 2P
FC5002	A D 3P
K2001	B C 13N
K2002	B C 13N
K2003	B C 9O
K2004	B C 9O
K2251	B C 15N
K2252	B C 15N
K2253	B C 15N
K5101	A D 2K
K5102	A D 1N
K5301	A D 4G
K6080	B C 21N
LF5001	A D 4P
LF5002	A D 3N
PC3001	A D 16F
PC3002	A D 8G
PC5101	A D 4M
T2051	A D 9O
T2052	A D 6L
T5001	A D 1K
TU6001	A D 22P
VA5003	A D 2O
X1	A D 11L
X2	A D 11L
X3001	A D 13F
X3002	A D 13F

4.16 REMOTE CONTROLLER SCHEMATIC DIAGRAM

NOTES:
1. All parts shown in this schematic are critical for safety.
2. This schematic is only for reference.
   Avoid replacing individual parts.
   Replace the entire unit only.

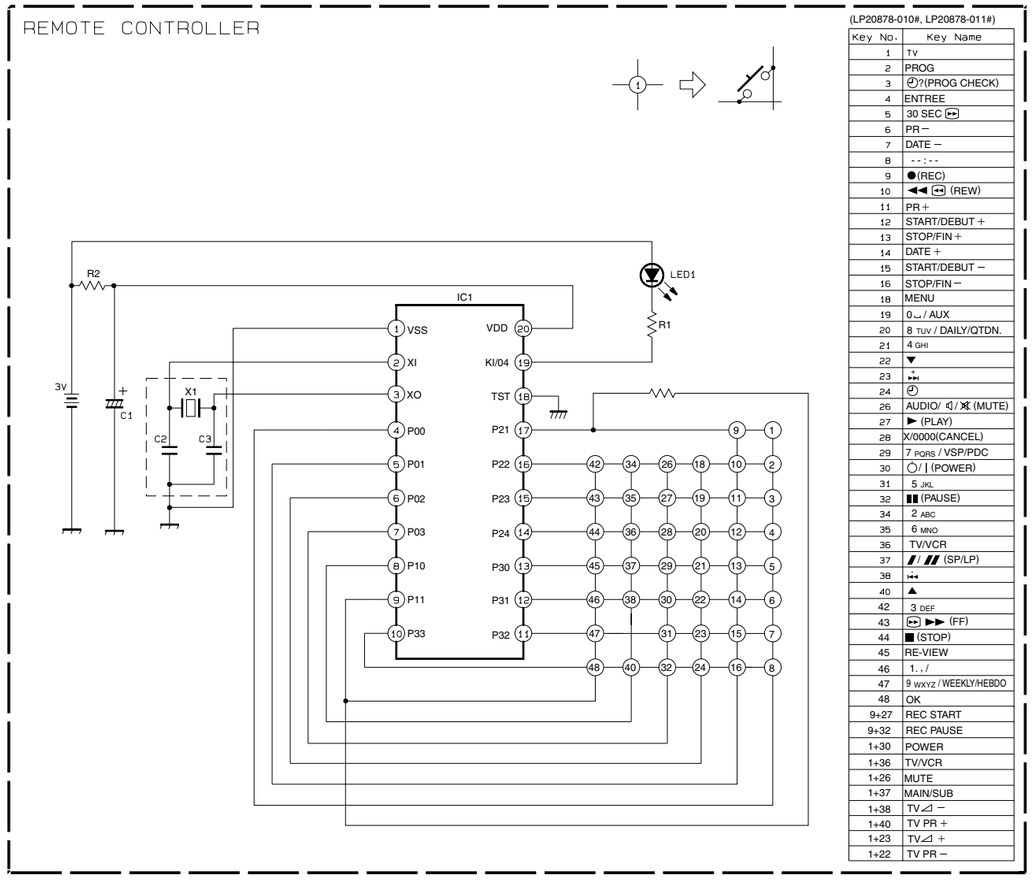

(LP20878-010#, LP20878-011#)

Key No.	Key Name
1	TV
2	PROG
3	?(PROG CHECK)
4	ENTREE
5	30 SEC
6	PR −
7	DATE −
8	- - : - -
9	●(REC)
10	◀◀ (REW)
11	PR +
12	START/DEBUT +
13	STOP/FIN +
14	DATE +
15	START/DEBUT −
16	STOP/FIN −
18	MENU
19	0 ␣ / AUX
20	8 TUV / DAILY/QTDN.
21	4 GHI
22	▼
23	+
24	
26	AUDIO/ / (MUTE)
27	▶ (PLAY)
28	X/0000(CANCEL)
29	7 PQRS / VSP/PDC
30	/ (POWER)
31	5 JKL
32	▮▮ (PAUSE)
34	2 ABC
35	6 MNO
36	TV/VCR
37	/ / (SP/LP)
38	
40	▲
42	3 DEF
43	▶▶ (FF)
44	■ (STOP)
45	RE-VIEW
46	1. . /
47	9 WXYZ / WEEKLY/HEBDO
48	OK
9+27	REC START
9+32	REC PAUSE
1+30	POWER
1+36	TV/VCR
1+26	MUTE
1+37	MAIN/SUB
1+38	TV −
1+40	TV PR +
1+23	TV +
1+22	TV PR −

4.17 FDP GRID ASSIGNMENT AND ANODE CONNECTION

[A] (FDP with audio level indicator)

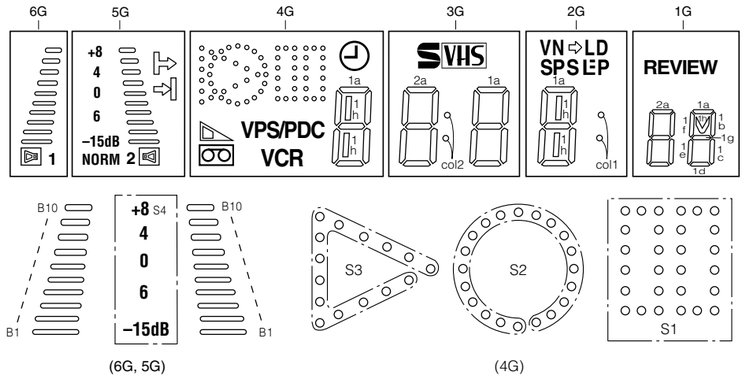

[B] (FDP without audio level indicator)

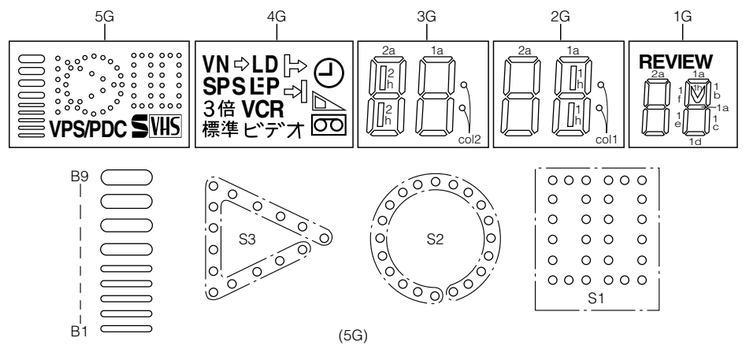

ANODE CONNECTION [A]

	6G	5G	4G	3G	2G	1G
P 1	—	⇨	S2	1a	1a	1a
P 2	—	⇨	S1	1b	1b	1b
P 3	—	S4	S3	1f	1f	1f
P 4	—	NORM	VPS/PDC	1g	1g	1g
P 5	1	2	◷	1c	1c	1c
P 6	▷	◁	◺	1e	1e	1e
P 7	B10	B10	∞	1d	1d	1d
P 8	B9	B9	VCR	col2	1h	1h
P 9	B8	B8	1a	2a	col1	2a
P10	B7	B7	1b	2b	⇨	2b
P11	B6	B6	1f	2f	VN	2f
P12	B5	B5	1g	2g	LD	2g
P13	B4	B4	1c	2c	SP	2c
P14	B3	B3	1e	2e	S (SEP)	2e
P15	B2	B2	1d	2d	= (SEP)	2d
P16	B1	B1	1h	SVHS	LP (SEP)	REVIEW

ANODE CONNECTION [B]

	5G	4G	3G	2G	1G
P 1	S2	⇨	1a	1a	1a
P 2	S1	⇨	1b	1b	1b
P 3	S3	3倍	1f	1f	1f
P 4	VPS/PDC	標準	1g	1g	1g
P 5	SVHS	◷	1c	1c	1c
P 6	—	◺	1e	1e	1e
P 7	—	∞	1d	1d	1d
P 8	B9	VCR	col2	1h	1h
P 9	B8	ビデオ	2a	2a	2a
P10	B7	⇨	2b	2b	2b
P11	B6	VN	2f	2f	2f
P12	B5	LD	2g	2g	2g
P13	B4	SP	2c	2c	2c
P14	B3	S (SEP)	2e	2e	2e
P15	B2	= (SEP)	2d	2d	2d
P16	B1	LP (SEP)	2h	col1	REVIEW

4.18 WAVEFORMS

< SYSCON >

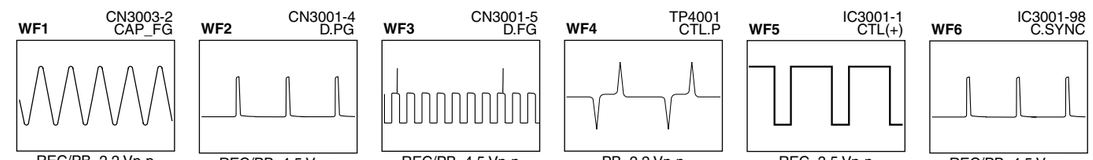

WF1 CN3003-2 CAP_FG
REC/PB 2.2 Vp-p
50 mV/0.5 msec/DIV

WF2 CN3001-4 D.PG
REC/PB 4.5 Vp-p
0.1 V/10 msec/DIV

WF3 CN3001-5 D.FG
REC/PB 4.5 Vp-p
0.1 V/10 msec/DIV

WF4 TP4001 CTL.P
PB 2.2 Vp-p
0.1 V/10 msec/DIV

WF5 IC3001-1 CTL(+)
REC 3.5 Vp-p
0.1 V/10 msec/DIV

WF6 IC3001-98 C.SYNC
REC/PB 4.5 Vp-p
0.1 V/20 μsec/DIV

< VIDEO >

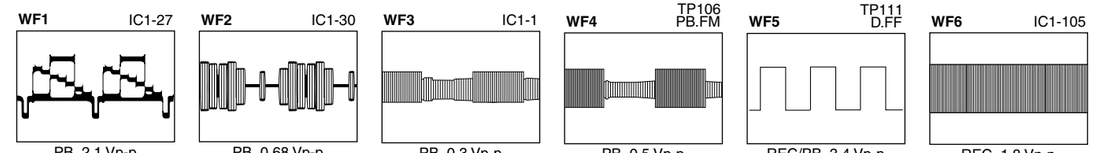

WF1 IC1-27
PB 2.1 Vp-p
50 mV/20 μsec/DIV

WF2 IC1-30
PB 0.68 Vp-p
20 mV/20 μsec/DIV

WF3 IC1-1
PB 0.3 Vp-p
20 mV/5 msec/DIV

WF4 TP106 PB.FM
PB 0.5 Vp-p
20 mV/5 msec/DIV

WF5 TP111 D.FF
REC/PB 3.4 Vp-p
0.1 V/10 msec/DIV

WF6 IC1-105
REC 1.8 Vp-p
0.1 V/1 msec/DIV

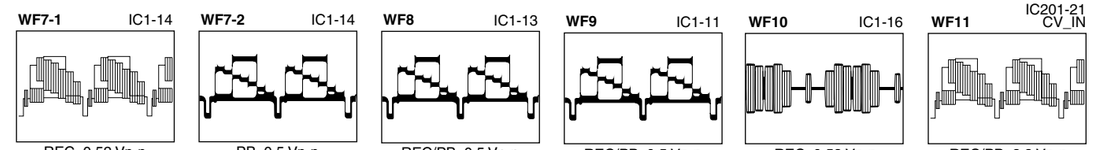

WF7-1 IC1-14
REC 0.52 Vp-p
20 mV/20 μsec/DIV

WF7-2 IC1-14
PB 0.5 Vp-p
20 mV/20 μsec/DIV

WF8 IC1-13
REC/PB 0.5 Vp-p
20 mV/20 μsec/DIV

WF9 IC1-11
REC/PB 0.5 Vp-p
20 mV/20 μsec/DIV

WF10 IC1-16
REC 0.58 Vp-p
20 mV/20 μsec/DIV

WF11 IC201-21 CV_IN
REC/PB 2.2 Vp-p
50 mV/20 μsec/DIV

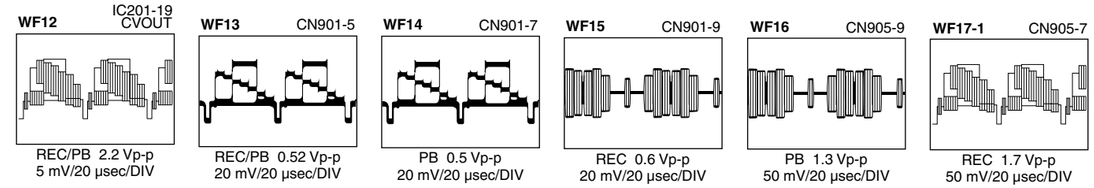

WF12 IC201-19 CVOUT
REC/PB 2.2 Vp-p
5 mV/20 μsec/DIV

WF13 CN901-5
REC/PB 0.52 Vp-p
20 mV/20 μsec/DIV

WF14 CN901-7
PB 0.5 Vp-p
20 mV/20 μsec/DIV

WF15 CN901-9
REC 0.6 Vp-p
20 mV/20 μsec/DIV

WF16 CN905-9
PB 1.3 Vp-p
50 mV/20 μsec/DIV

WF17-1 CN905-7
REC 1.7 Vp-p
50 mV/20 μsec/DIV

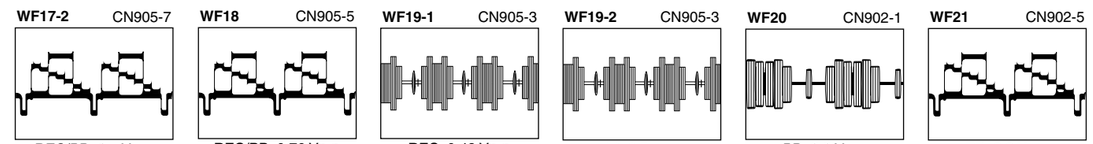

WF17-2 CN905-7
REC/PB 1.7 Vp-p
50 mV/20 μsec/DIV

WF18 CN905-5
REC/PB 0.76 Vp-p
20 mV/20 μsec/DIV

WF19-1 CN905-3
REC 0.48 Vp-p
20 mV/20 μsec/DIV

WF19-2 CN905-3
PB 0.7 Vp-p
20 mV/20 μsec/DIV

WF20 CN902-1
PB 0.6 Vp-p
20 mV/20 μsec/DIV

WF21 CN902-5
PB 2.2 Vp-p
50 mV/20 μsec/DIV

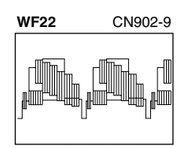

WF22 CN902-9
REC/PB 2.2 Vp-p
50 mV/20 μsec/DIV

< AUDIO >

WF1 IC1-80

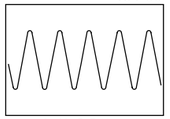

REC 0.2 Vp-p
5 mV/0.5 msec/DIV

WF2 IC1-62

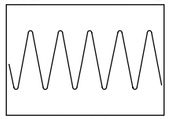

REC/PB 0.9 Vp-p
20 mV/0.5 msec/DIV

WF3 IC1-52

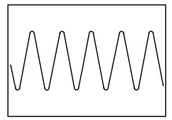

REC 0.11 Vp-p
2 mV/0.5 msec/DIV

WF4 IC1-48

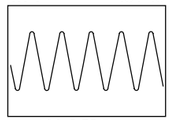

PB 0.58 Vp-p
10 mV/0.5 msec/DIV

WF5 IC1-119

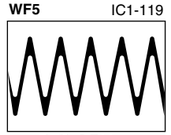

REC 0.7 Vp-p
20 mV/0.5 msec/DIV

WF6 IC1-97

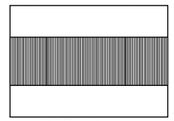

REC 1.1 Vp-p
0.1 V/5 msec/DIV

WF7 TP2253 A.PB.FM

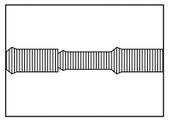

PB 0.5 Vp-p
50 mV/5 msec/DIV

4.19 VOLTAGE CHARTS

<MAIN>

MODE PIN NO.	REC	PLAY
IC1		
1	4.2	2.2
2	2.8	2.9
3	2.6	2.6
4	1.9	1.4
5	1.9	1.4
6	2.4	2.1
7	1.6	0.7
8	0	0
9	2.6	3.0
10	1.9	2.0
11	3.1	3.1
12	2.8	2.4
13	3.1	3.1
14	3.5	2.4
15	0	0
16	2.8	2.8
17	1.5	1.5
18	2.8	2.8
19	0	4.8
20	2.8	2.8
21	1.5	2.0
22	2.8	2.8
23	3.1	2.9
24	4.9	4.9
25	0.3	0.3
26	0	0
27	1.3	2.3
28	2.8	2.5
29	1.9	1.9
30	2.1	2.1
31	0	0
32	2.6	2.6
33	4.9	4.9
34	2.7	2.4
35	4.9	4.9
36	2.6	2.6
37	2.3	2.3
38	-	-
39	1.3	1.3
40	-	-
41	2.7	2.7
42	2.2	2.2
43	0	0
44	2.1	2.1
45	4.6	4.6
46	4.1	4.1
47	2.9	2.9
48	2.6	2.6
49	5.0	5.0
50	2.5	2.5
51	2.8	2.8
52	2.3	2.3
53	2.3	2.3
54	2.6	2.6
55	2.2	2.2
56	0.5	0.5
57	2.3	2.3
58	8.3	8.3
59	4.6	4.6
60	4.1	4.1
61	4.2	4.2
62	4.2	4.2
63	2.3	2.3
64	2.3	2.3
65	0.6	0.6
66	3.1	3.1
67	4.2	4.2
68	4.2	4.2
69	2.3	2.3
70	0	0
71	0.2	0.2
72	0.2	0.2
73	0.3	0.3
74	2.3	2.3
75	2.5	2.5
76	0	0
77	2.6	2.6
78	0.3	0.3
79	0.3	0.3
80	0.2	0.2
81	2.3	2.3
82	0	0.7
83	0	0
84	2.3	2.3
85	2.3	2.3
86	2.3	2.3
87	1.6	1.8
88	2.3	2.3
89	2.3	2.3
90	2.3	2.3
91	0.1	0
92	0	0
93	0	2.4
94	0	1.8
95	0	0
96	2.6	2.3
97	2.6	2.3
98	2.6	2.3
99	4.9	4.9
100	4.9	4.9

MODE PIN NO.	REC	PLAY
101	0	0
102	0	0
103	0	0
104	2.3	2.3
105	2.3	2.3
106	2.4	2.4
107	4.9	4.9
108	0	0
109	0	0
110	0	0
111	0	1.8
112	2.5	2.5
113	0.7	0.7
114	0	0
115	2.5	2.5
116	2.5	2.5
117	2.5	2.5
118	0	0
119	2.5	2.5
120	4.5	4.5
IC201		
1	0	0
2	2.5	2.5
3	4.9	4.9
4	0	0
5	4.4	4.4
6	2.4	2.4
7	2.4	2.4
8	4.9	4.9
9	3.3	3.3
10	4.2	4.2
11	1.6	1.6
12	4.9	4.9
13	2.7	2.7
14	2.7	2.7
15	0	0
16	1.2	1.2
17	0	0
18	4.9	4.9
19	2.3	2.3
20	0	0
21	2.3	2.3
22	0.5	0.5
23	4.9	4.9
24	2.9	2.9
25	2.5	2.5
26	4.9	4.9
27	4.6	4.6
28	3.5	3.5
29	4.9	4.9
30	4.9	4.9
IC3001		
1	2.5	2.5
2	0	0
3	2.5	2.5
4	2.4	2.4
5	0	1.5
6	2.4	2.6
7	2.4	2.4
8	2.4	2.4
9	4.8	4.8
10	4.8	4.8
11	0	0
12	0	0.2
13	0	2.0
14	4.4	4.6
15	4.9	4.6
16	0.6	0.6
17	4.0	4.0
18	0	0
19	3.1	3.1
20	4.5	4.5
21	3.8	3.8
22	0.2	1.9
23	0	0
24	4.8	4.8
25	0	0
26	4.9	4.9
27	4.9	4.9
28	4.9	4.9
29	4.9	4.9
30	0	0
31	4.9	4.9
32	4.9	4.9
33	0	0
34	4.9	4.9
35	0	0
36	0	0
37	0	0
38	0	4.9
39	4.0	4.0
40	0	0
41	4.8	4.8
42	4.8	4.8
43	0	0
44	0	0
45	4.9	4.9
46	0	0
47	2.8	2.8
48	0	0
49	4.1	4.1

MODE PIN NO.	REC	PLAY
50	4.6	4.6
51	1.3	1.3
52	1.3	1.3
53	4.2	4.2
54	5.0	5.0
55	5.0	5.0
56	4.9	4.9
57	0	0
58	4.9	4.9
59	0	0
60	4.9	4.9
61	4.9	4.9
62	0	0
63	0	0
64	-	-
65	-	-
66	-	-
67	-	-
68	0	0
69	-	-
70	3.3	3.3
71	4.9	4.9
72	4.9	4.9
73	4.9	4.9
74	0	0
75	4.4	4.4
76	4.4	4.4
77	4.9	0
78	0	0
79	0	0
80	0	0
81	4.9	4.9
82	4.9	4.9
83	2.4	2.4
84	0	0
85	0	0
86	4.9	4.9
87	4.9	0
88	4.9	4.9
89	0	0
90	0	0
91	0	0
92	4.9	4.9
93	0	0
94	0	0
95	4.9	4.9
96	0	0
97	4.9	0
98	0.8	0.8
99	0	2.2
100	2.4	2.4
101	2.4	2.4
102	1.4	1.4
103	4.9	4.9
104	4.9	0
105	4.9	0
106	0	0
107	0	0
108	1.2	1.2
109	4.9	4.9
110	0	0
111	0	0
112	2.4	2.4
IC3002		
1	4.9	4.9
2	4.9	4.9
3	0	0
4	0	0
IC3003		
1	0	0
2	0	0
3	0	0
4	0	0
5	4.5	4.5
6	4.5	4.5
7	0	0
8	4.9	4.9
IC3004		
1	11.4	11.4
2	0.2	0.2
3	0	0
4	0.2	0.2
5	11.4	11.4
6	11.4	11.4
7	0	0
8	0	0
9	0	0
IC5301		
1	2.4	2.4
2	0	0
3	4.4	4.4
IC7001		
1	4.9	4.9
2	0	0
3	0	0
4	0	0
5	1.6	1.6
6	0	0
7	0	0
8	4.2	4.2
9	3.9	3.9

MODE PIN NO.	REC	PLAY
10	0	0
11	0	0
12	0	0
13	0	0
14	4.9	4.9
15	-	-
16	-	-
17	-	-
18	-	-
19	-	-
20	-	-
21	-	-
22	-	-
23	-	-
24	-	-
25	-	-
26	-	-
27	-26.0	-26.0
28	-	-
29	-	-
30	-	-
31	-	-
32	-	-
33	-	-
34	-	-
35	-	-
36	-	-
37	-	-
38	4.9	4.9
39	4.9	4.9
40	4.9	4.9
41	4.9	4.9
42	0	0
43	0	0
44	2.7	2.7
IC7003		
1	4.9	4.9
2	4.9	4.9
3	0	0
CN1		
1	0	0
2	0	0
3	0	0
4	0	0
5	2.3	2.3
6	2.3	2.3
7	2.3	2.3
8	2.3	2.3
9	2.6	2.3
10	2.6	2.3
11	2.6	2.3
CN501		
1	2.4	2.4
2	0	0
3	2.3	2.3
4	4.9	4.9
5	2.1	2.1
6	0.3	4.5
7	3.3	3.3
8	0	0
9	2.8	2.8
10	0	0
11	4.6	4.6
12	4.1	4.1
13	0	0
14	0	0
15	2.5	2.5
16	0	0
17	0	0
CN901		
1	4.6	4.6
2	4.1	4.1
3	0.3	0.3
4	0	0
5	2.5	2.3
6	0	0
7	3.5	2.4
8	0	0
9	2.8	2.8
10	4.9	4.9
CN902		
1	2.8	2.8
2	0	0
3	0	0
4	2.4	2.1
5	1.3	2.3
6	4.9	4.9
7	0	0
8	0	0
9	2.3	2.3
10	0	0
11	0	0
12	2.4	2.1
CN903		
1	4.7	4.7
2	0	0
3	0	0
4	0	0
5	0.8	0.8
6	10.1	10.1
7	10.1	10.1

MODE PIN NO.	REC	PLAY
8	4.5	4.5
9	4.5	4.5
10	0	0
CN904		
1	0	0
2	4.9	4.9
3	0	0
4	0.2	0.2
5	0	0.2
6	0	0
7	0	0
8	0	0
9	0	0
10	0	0
11	0	0
CN905		
1	2.4	2.4
2	0	0
3	2.8	2.8
4	0	0
5	3.3	3.3
6	0	0
7	2.1	2.1
8	0	0
9	2.3	2.3
CN2001		
1	0	0
2	0	0
3	0	0
4	0	0
5	0	0
6	2.3	2.3
7	2.2	2.2
CN2002		
1	0	0
2	0	0
CN3001		
1	11.4	11.4
2	0	0
3	1.3	1.3
4	0	0
5	1.3	1.3
CN3002		
1	0	0
2	0	0.2
CN3003		
1	0	0
2	2.5	2.5
3	2.4	2.4
4	4.8	4.8
5	0	0
6	4.9	4.9
7	-	-
8	9.2	9.2
CN3004		
1	4.9	4.9
2	4.9	4.9
3	0	0
4	0	0
CN3901		
1	0	0
2	4.9	4.9
3	0	0
4	4.9	4.9
5	3.0	3.0
6	0	0
CN6701		
1	0	0
2	4.6	4.6
3	4.5	4.5
4	4.8	4.8
5	0.3	0.3
6	0.3	0.3
7	5.0	5.0
8	0	0
9	0	0
10	0.1	0
CN7001		
1	4.9	4.9
2	0	0
3	0	0
4	0	0
5	0	0
6	0	0
7	0	0
8	3.0	2.0
9	3.0	3.3

<2D DIGITAL>

MODE PIN NO.	REC	PLAY
IC1201	-	-
CN1201		
1	2.4	2.4
2	0	0
3	2.3	2.3
4	4.9	4.9
5	2.1	2.1
6	0.3	4.5
7	3.3	3.3
8	0	0

MODE PIN NO.	REC	PLAY
9	2.8	2.8
10	0	0
11	4.6	4.6
12	4.1	4.1
13	0	0
14	0	0
15	2.5	2.5
16	0	0
17	0	0

<TERMINAL>

MODE PIN NO.	REC	PLAY
IC501	-	-
IC502		
1	2.0	2.0
2	0.1	4.9
3	3.3	3.3
4	3.4	3.4
5	4.9	4.9
6	2.2	2.2
7	2.0	2.0
8	4.9	0
9	1.4	0
10	2.9	2.9
11	2.9	2.9
12	2.9	2.9
13	0	0
14	2.8	2.8
15	2.8	2.8
16	1.9	1.9
17	2.0	2.0
18	1.9	1.9
IC901	-	-
CN911		
1	4.6	4.6
2	4.1	4.1
3	0.3	0.3
4	0	0
5	2.5	2.3
6	0	0
7	3.5	2.4
8	0	0
9	2.8	2.8
10	4.9	4.9
CN912		
1	2.8	2.8
2	0	0
3	0	0
4	2.4	2.1
5	1.3	2.3
6	4.9	4.9
7	0	0
8	0	0
9	2.3	2.3
10	0	0
11	0	0
12	2.4	2.1
CN913		
1	4.7	4.7
2	0	0
3	0	0
4	0	0
5	0.8	0.8
6	10.1	10.1
7	10.1	10.1
8	4.5	4.5
9	4.5	4.5
10	0	0
CN914		
1	0	0
2	4.9	4.9
3	0	0
4	0.2	0.2
5	0	0.2
6	0	0
7	0	0
8	0	0
9	0	0
10	0	0
11	0	0
CN915		
1	2.4	2.4
2	0	0
3	2.8	2.8
4	0	0
5	3.3	3.3
6	0	0
7	2.1	2.1
8	0	0
9	2.3	2.3
CN916		
1	0	0
2	0	0
3	0	0
4	0	0

<DEMOD>

MODE PIN NO.	REC	PLAY
IC6701		
1	4.3	4.3
2	1.5	1.5
3	1.5	0
4	0	0
5	2.0	2.0
6	1.9	1.9
7	0.2	0.2
8	0	0
9	0	0
10	3.6	3.6
11	3.6	3.6
12	4.5	4.5
13	4.5	4.5
14	2.2	2.2
15	2.1	2.2
16	0	0
17	0.3	0.3
18	0.3	0.3
19	4.5	4.5
20	0	0
21	0.3	0.3
22	4.7	4.7
23	0	0
24	0	0
25	0	0
26	0	0
27	0	0
28	0	0
29	0	0
30	2.4	2.4
31	2.4	2.4
32	0	0
33	4.7	4.7
34	3.8	3.8
35	0	0
36	2.4	2.4
37	0	0
38	0	0
39	0	0
40	0	0
41	0	0
42	2.5	2.5
43	2.4	2.4
44	0	0
CN6701		
1	0	0
2	4.6	4.6
3	4.5	4.5
4	4.8	4.8
5	0.3	0.3
6	0.3	0.3
7	5.0	5.0
8	0	0
9	0	0
10	0.1	0

<S-JACK>

MODE PIN NO.	REC	PLAY
CN7108		
1	0	0
2	0	0
3	0	0
4	0	0

<ADV.JOG>

MODE PIN NO.	REC	PLAY
CN7003		
1	3.0	3.3
2	3.0	2.0
3	0	0
4	0	0
5	0	0
6	0	0
7	0	0
8	0	0
9	4.9	4.9

4.20 CPU PIN FUNCTION

<SYSCON IC3001>

PIN NO.	LABEL	IN/OUT	FUNCTION
1	CTL(+)	IN/OUT	CTL(+) SIGNAL
2	SVSS	-	GND
3	CTL(-)	IN/OUT	CTL(-) SIGNAL
4	CTLBIAS	-	CTL BIAS VOLTAGE
5	CTLFB	IN	CTL PULSE FEEDBACK
6	CTLAMPOUT	OUT	CTL PULSE OUTPUT
7	CTLSMTIN	IN	CTL PULSE INPUT
8	CFG	IN	CAPSTAN FG PULSE INPUT
9	SVCC	-	SYSTEM POWER
10	AVCC	-	SYSTEM POWER FOR ANALOG CIRCUIT
11	NORM/MESEC/S	IN	SVHS MODE:H
12	SECAM_DET	IN	NC
13	VIDEO_ENV	IN	AUTO TRACKING DETECT/INPUT THE AVERAGE OF PLAYBACK VIDEO SIGNAL
14	START_SENSOR	IN	START SENSOR
15	END_SENSOR	IN	END SENSOR
16	IND(L)	-	NC
17	PROTECT	IN	DETECTION SIGNAL FOR SW POWER SUPPLY
18	SCR_ID	IN	SCRAMBLE CONTROL INPUT (SCRAMBLE:H)
19	IND(R)	-	NC
20	AFC	IN	TUNING CHECK
21	RF AGC	IN	CHANGES IN ATS+IC OUTPUT AS CAUSED BY CHANGES IN RECEIVER SENSITIVITY WHEN THE SAME CHANNEL IS RECEIVED MORE THAN ONCE ARE INPUT.
22	A.ENV/IND(L)	IN	AUDIO PB FM ENV.INPUT/NON HiFi MODE:L
23	AVSS	-	GND FOR ANALOG CIRCUIT
24	CTL_GAIN	OUT	CONTROL AMP OUT FREQUENCY RESPONSE SWITCHING
25	LSA	IN	MECHANISM MODE DETECT(A)
26	LSB	IN	MECHANISM MODE DETECT(B)
27	LSC	IN	MECHANISM MODE DETECT(C)
28	CAP_REV(L)	OUT	CAPSTAN MOTOR REVERSE CONTROL (FWD:H/REV:L)
29	RC	IN	REMOTE CONTROL DATA INPUT
30	LOCK(L)	IN	TUNING PLL LOCK DETECT:L
31	P50_IN	IN	CONTROL SIGNAL FOR TV LINK
32	R.PAUSE	-	NC
33	P50_OUT	OUT	CONTROL SIGNAL FOR TV LINK
34	P.SAVE(L)	OUT	POWER SAVE:L
35	LMC1	OUT	LOADING MOTOR DRIVE(1)
36	LMC2	OUT	LOADING MOTOR DRIVE(2)
37	LMC3	OUT	LOADING MOTOR DRIVE(3)
38	SB_G(PWM)	OUT	VOLTAGE CONTROL SIGNAL FOR VIDEO FREQUENCY RESPONSE
39	STB/TEST	OUT	STROBE SIGNAL (FOR FDP DRIVER)
40	POWER_DET	IN	DETECTION SIGNAL FOR POWER DOWN OF AC POWER SUPPLY
41	P.CTL(H)	OUT	CONTROL SIGNAL FOR SWITCHING POWER SUPPLY
42	SP(H)	-	NC
43	VSS	-	GND
44	RMO	OUT	REMOTE CONTROL OUTPUT FOR SATELLITE RECEIVER
45	VCC	-	SYSTEM POWER
46	S.CASS(H)	IN	DETECTION SIGNAL FOR SVHS CASSETTE (SVHS:H)
47	OSD_CS	OUT	CHIP SELECT FOR THE ON-SCREEN IC
48	ET_PB(H)	-	NC
49	I2C_DATA_A/V	IN/OUT	SERIAL DATA TRANSFER OUTPUT FOR THE VIDEO/AUDIO IC
50	I2C_CLK_A/V	OUT	SERIAL DATA TRANSFER CLOCK FOR THE VIDEO/AUDIO IC
51	S.DATA_TOSYS	IN	SERIAL DATA TRANSFER OUTPUT FROM THE ON-SCREEN IC TO THE FDP DRIVER
52	S.DATA_FRSYS	OUT	SERIAL DATA TRANSFER OUTPUT FROM THE FDP DRIVER TO THE ON-SCREEN IC
53	S.CLK	OUT	SERIAL DATA TRANSMISSION CLOCK FROM THE FDP DRIVER TO THE ON-SCREEN IC
54	SP_FG	IN	DETECTION SIGNAL FOR SUPPLY REEL ROTATION/TAPE REMAIN
55	TU_FG	IN	DETECTION SIGNAL FOR TAKE-UP REEL ROTATION/TAPE REMAIN
56	JSA	IN	INPUT FOR THE JOG SHUTTLE

PIN NO.	LABEL	IN/OUT	FUNCTION
57	JSB	IN	INPUT FOR THE JOG SHUTTLE
58	REC_SAFETY	IN	REC SAFETY SWITCH DETECT (SW ON:L)
59	SW1	OUT	TUNER SYSTEM MODE:H
60	TU_CLK	OUT	CLOCK FOR DATA TRANSFER TO THE TUNER UNIT
61	TU_DATA	OUT	TUNING DATA
62	FWE	OUT	FLASH WRITE ENABLE
63	NMI(L)	-	NC
64	X2	-	TIMER CLOCK (32.768KHz)
65	X1	-	TIMER CLOCK (32.768KHz)
66	RES(L)	-	RESET TERMINAL (RESET ON:L)
67	OSC1(IN)	-	MAIN SYSTEM CLOCK(10MHz)
68	VSS	-	GND
69	OSC2(OUT)	-	MAIN SYSTEM CLOCK(10MHz)
70	VCC/VCL	-	SYSTEM POWER
71	MODE	IN	FWE MODE
72	TU_A_MUTE(H)	OUT	TUNER AUDIO MUTE CONTROL (MUTE:H)
73	TU_V_MUTE(H)	OUT	TUNER VIDEO CONTROL (MUTE:H)
74	A.MUTE(H)	OUT	AUDIO MUTE CONTROL (MUTE:H)
75	I2C_CLK2	OUT	SERIAL DATA TRANSFER CLOCK FOR MEMORY IC
76	I2C_DATA2	IN/OUT	SERIAL DATA TRANSFER OUTPUT FOR MEMORY IC
77	FLY_REC(H)	-	NC
78	P.ON_PULSE/3.58 NTSC(L)	OUT	P.ON_PULSE(H)
79	V.UP(H)/V_DOWN(L)/EE(L)	OUT	HIGH SPEED FF/REW TURBO SEARCH:H
80	V.P.CTL	-	NC
81	VHS(H)	OUT	VHS MODE(H)
82	VCC	-	SYSTEM POWER
83	SLOW_P	-	NC
84	VSS	-	GND
85	SP_SHORT(H)	OUT	MODE SELECT
86	LP_SHORT(H)	OUT	MODE SELECT
87	FLY_ON(H)	-	NC
88	H.REC_ST(H)	OUT	HIFI AUDIO SOUND RECORDING START
89	TRICK(H)	-	NC
90	HEAD_SEL	OUT	HEAD SELECT(LP HEAD:H, SP HEAD:L)
91	SW2	OUT	TUNER SYSTEM MODE:L
92	SYNC_DET(H)	IN	DETECTION OF VIDEO SYNC SIGNAL (DETECTED:H)
93	MESECAM(H)	OUT	MESECAM:H
94	SECAM(H)	-	NC
95	PAL_PB(H)	OUT	PAL FM (PB ON:H)
96	SEP_PB(H)	OUT	PAL EP MODE(H)
97	N.REC_ST(H)	OUT	NORMAL AUDIO SOUND RECORDING START
98	C.SYNC	IN	COMPOSITE SYNC
99	A.FF	OUT	AUDIO FF OUTPUT
100	V.FF	OUT	ROTATION DETECTION SIGNAL FOR DRUM MOTOR/TIMING CONTROL SIGNAL FOR REC
101	CAPPWM	OUT	CAPSTAN MOTOR CONTROL
102	DRUMPWM	OUT	DRUM MOTOR CONTROL
103	P.MUTE(L)	OUT	PICTURE MUTE CONTROL(MUTE:L)
104	FULL_E_ON(H)	-	NC
105	N.REC(H)	OUT	NORMAL AUDIO REC MODE CONTROL SIGNAL (REC:H)
106	V_DOWN(L)/HI_FF/REW(L)	OUT	NC/HIGH SPEED FF/REW:L
107	DPG	IN	DRUM PICKUP PULSE INPUT (SWITCHING PULSE)
108	DFG	IN	DRUM FG PULSE INPUT
109	VCC	-	SYSTEM POWER
110	V.PULSE	OUT	V.PULSE ADDITION TIMING CONTROL
111	VSS	-	GND
112	CTLREF	-	CTL REFERENCE VOLTA

4.21 SYSTEM BLOCK DIAGRAM

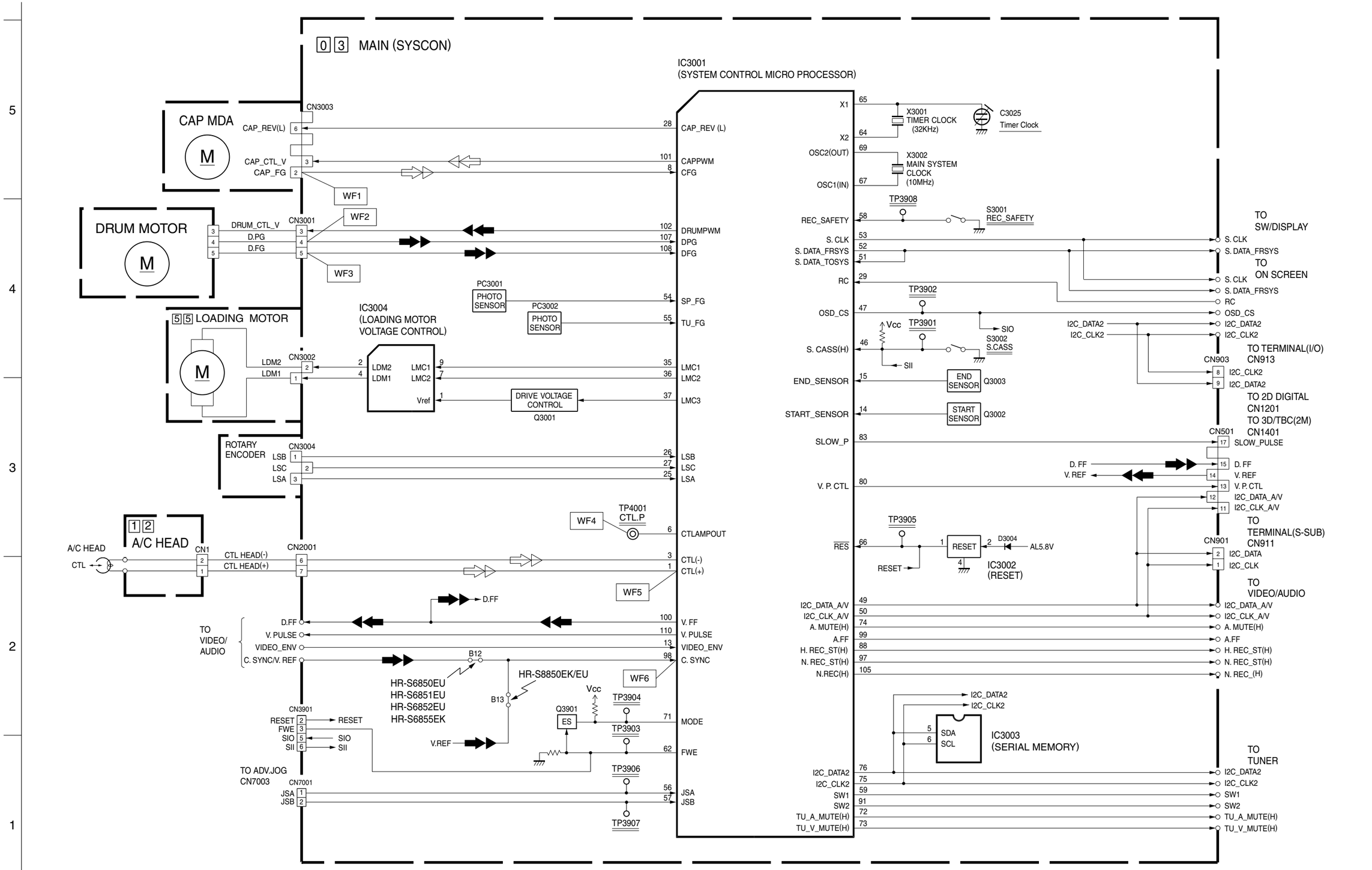

Note : For the waveforms in this block diagram, refer to page 4-34.

4.22 VIDEO BLOCK DIAGRAM

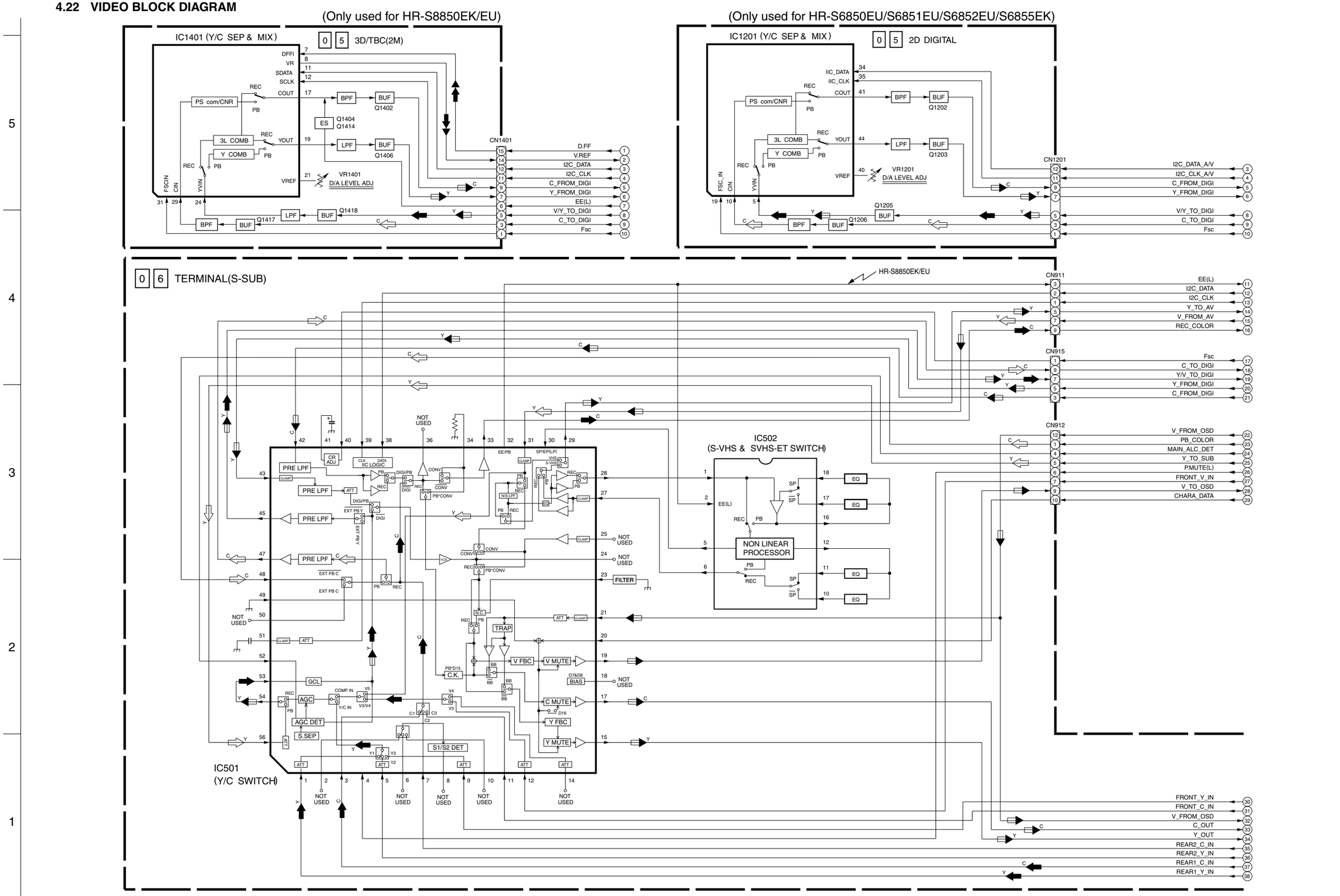

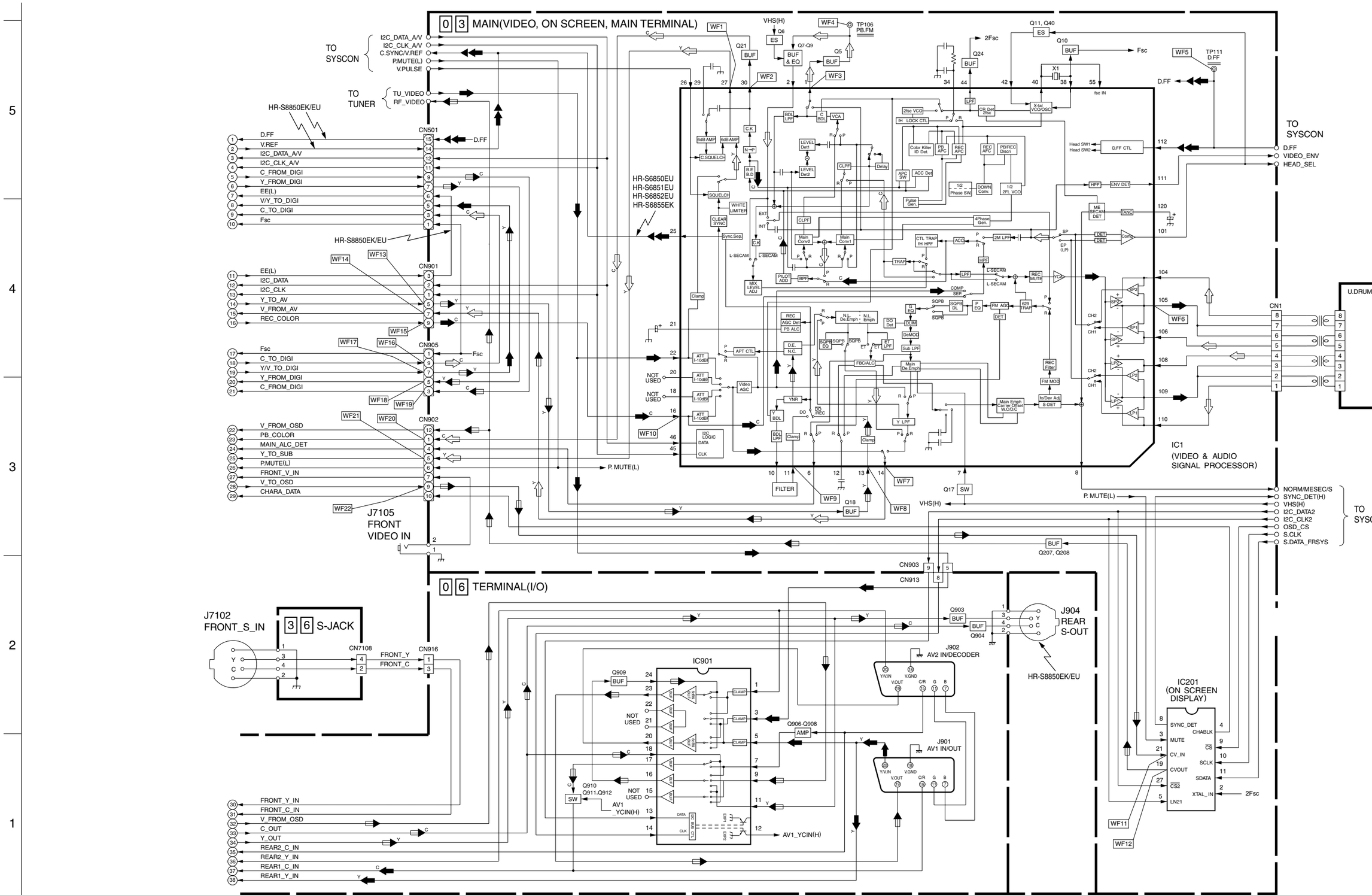

Note : For the waveforms in this block diagram, refer to page 4-34.

4.23 AUDIO BLOCK DIIAGRAM

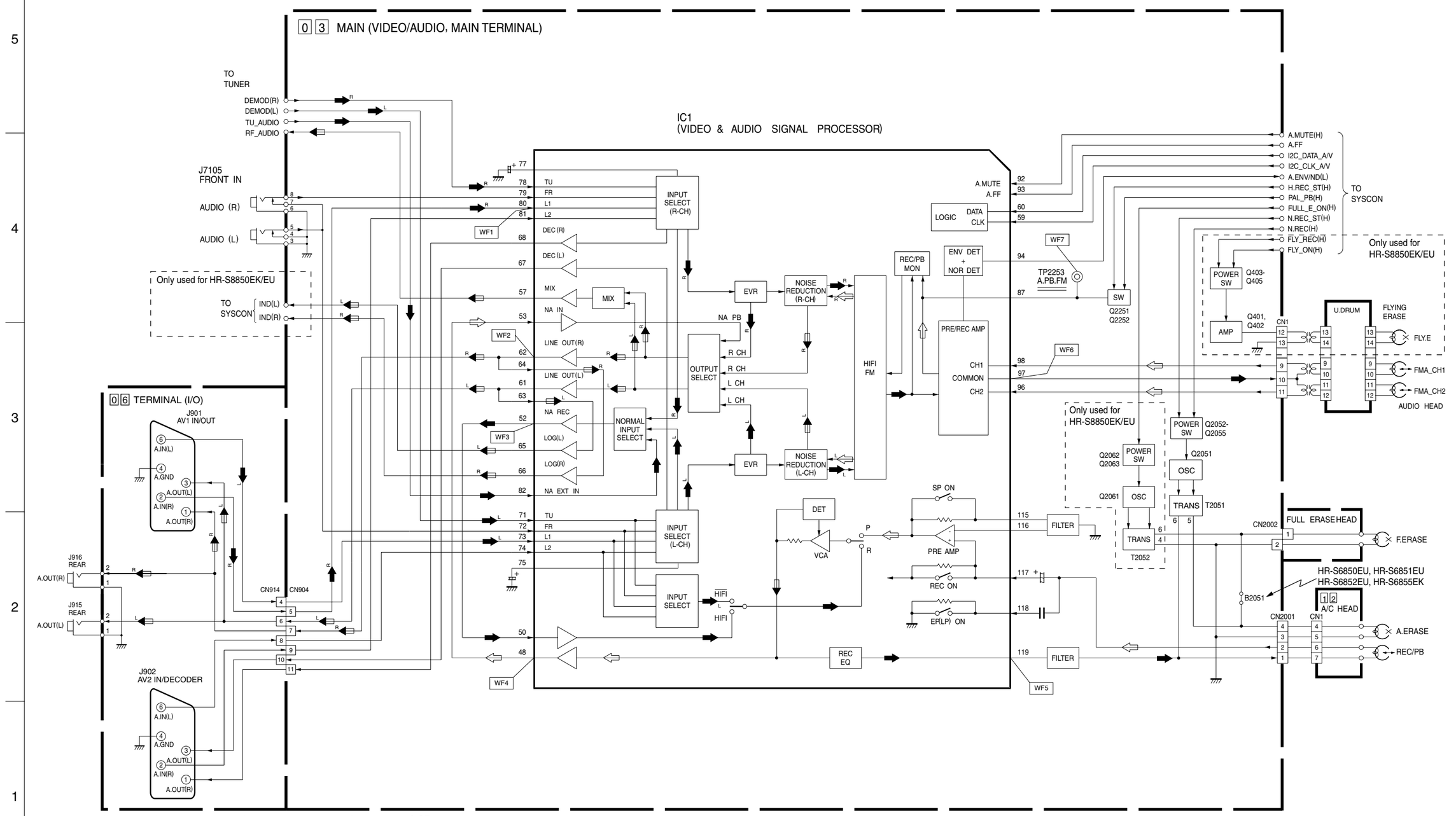

Note : For the waveforms in this block diagram, refer to page 4-35.

SECTION 5
PARTS LIST

SAFETY PRECAUTION

Parts identified by the ⚠ symbol are critical for safety. Replace only with specified part numbers.

5.1 PACKING AND ACCESSORY ASSEMBLY <M1>

The instruction manual to be provided with this product will differ according to the destination.

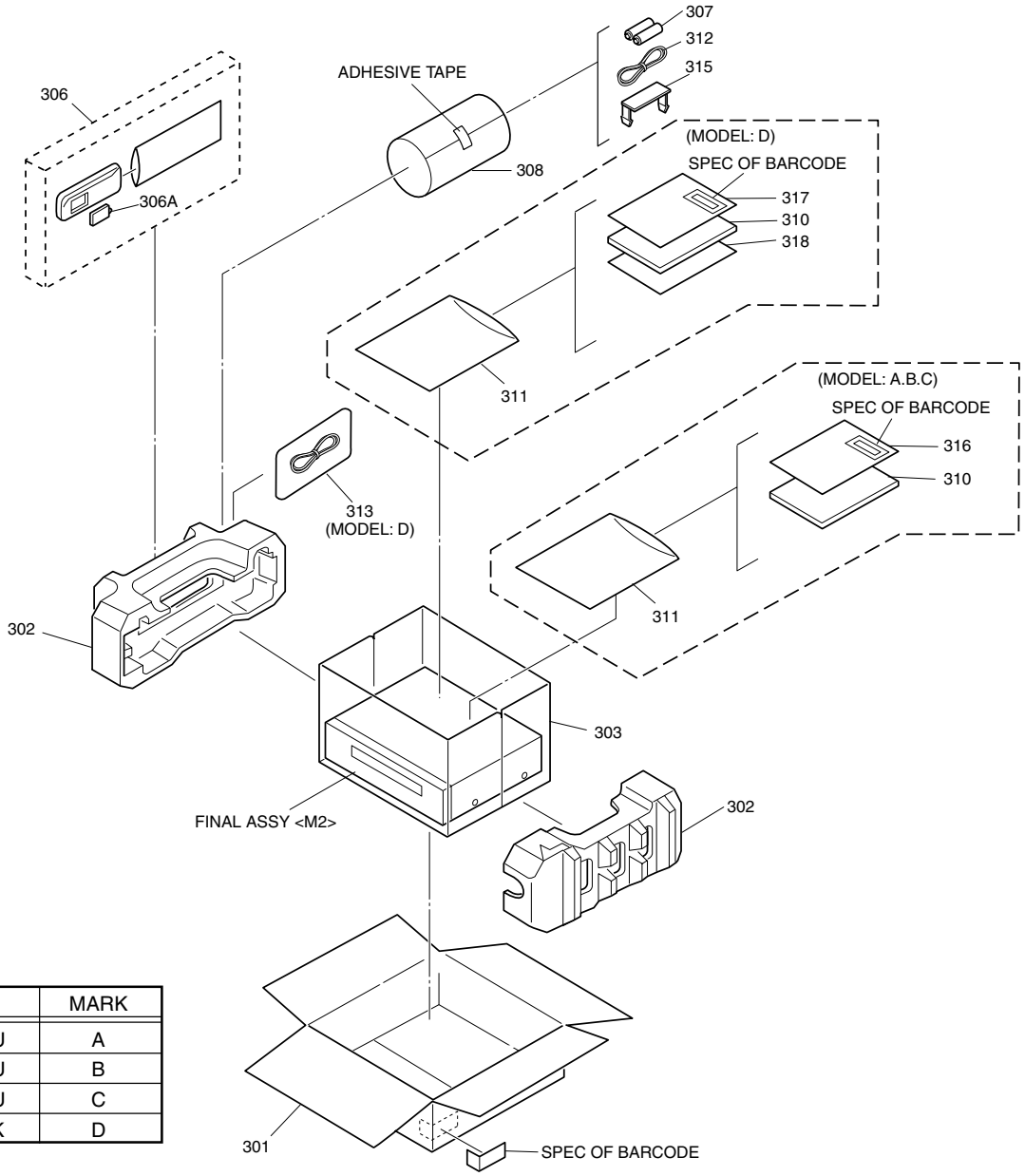

MODEL	MARK
HR-S6850EU	A
HR-S6851EU	B
HR-S6852EU	C
HR-S6855EK	D

#	⚠	REF No.	PART No.	PART NAME, DESCRIPTION

****

PACKING AND ACCESSORY ASSEMBLY <M1>

		301	LP30855-002B	PACKING CASE
		302	LP30909-001C	CUSHION ASSY
		303	PQM30021-93	POLY BAG
		306	LP20878-010A	REMOTE CONTROLLER,A,B,D
			LP20878-011A	REMOTE CONTROLLER,C
		306A	LP40610-001A	COVER(BATTERY),C
			LP40610-002A	COVER(BATTERY),A,B,D
		307	–	BATTERY,X2(“R6”TYPE)
		308	QPC02202230P	POLY BAG
	⚠	310	LPT0485-001A	INST BOOK(EN),A,B,C
	⚠		LPT0485-002A	INST BOOK(GE),A,B,C
	⚠		LPT0546-001B	INST BOOK(EN),D
		311	QPC02503530P	POLY BAG
		312	PEAC0300-02	RF CABLE
		313	QAL0095-005	LED CABLE ASSY,D
		315	LP30809-001B	CAP(JACK)
		316	BT-54013-2	WARRANTY CARD,A,B,C
		317	BT-54008-2	GUARANTY CARD,D
		318	LYT0194-001B	Q.CARD(JUK),D

5.2 FINAL ASSEMBLY <M2>

BEWARE OF BOGUS PARTS

Parts that do not meet specifications may cause trouble in regard to safety and performance. We recommend that genuine JVC parts be used.

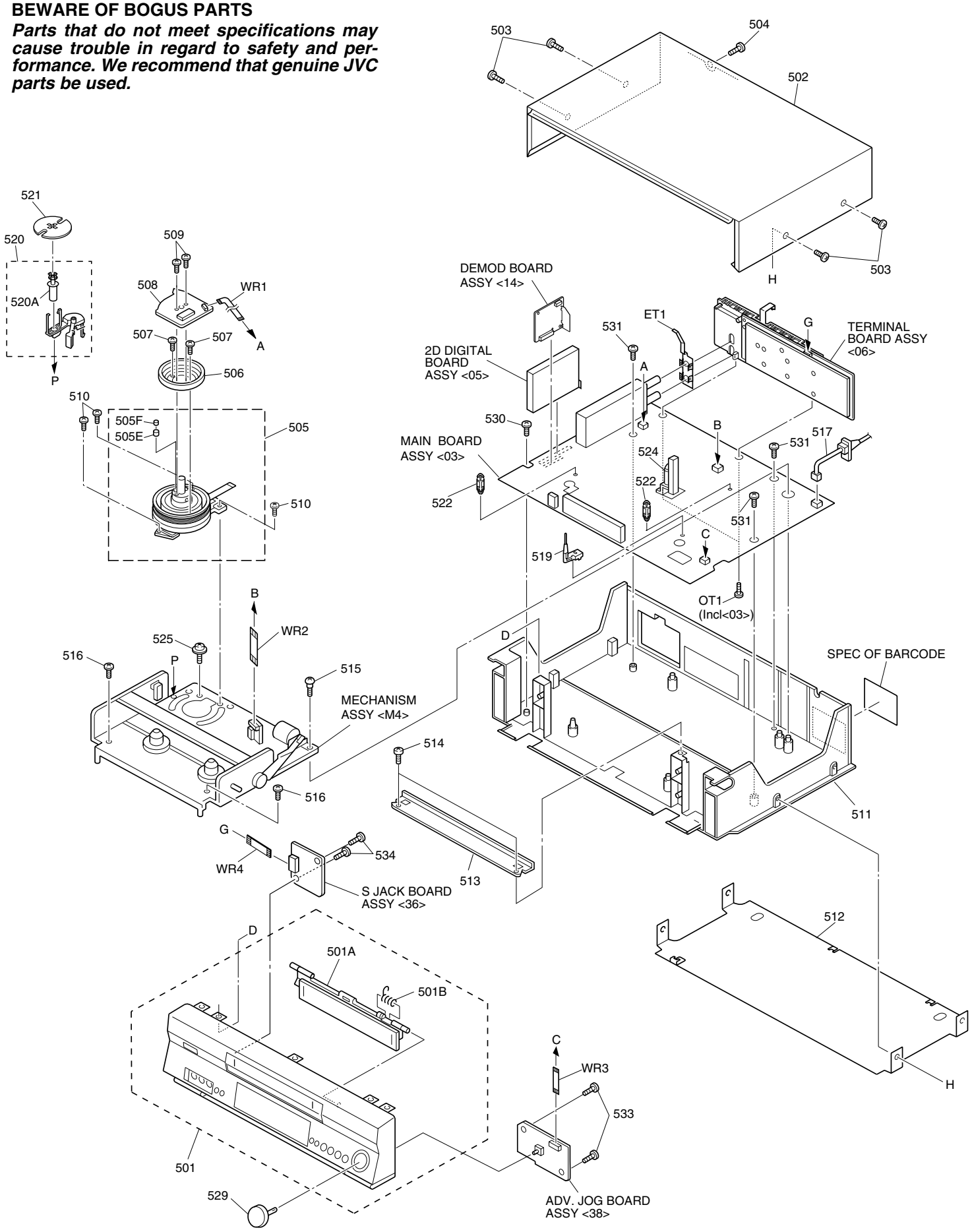

#	⚠	REF No.	PART No.	PART NAME, DESCRIPTION

****

FINAL ASSEMBLY <M2>

#	⚠	REF No.	PART No.	PART NAME, DESCRIPTION
	⚠	501	LP10333-017E	FRONT PANEL ASSY,D
	⚠		LP10333-023C	FRONT PANEL ASSY,C
	⚠		LP10333-026C	FRONT PANEL ASSY,B
	⚠		LP10333-025C	FRONT PANEL ASSY,A
		501A	LP20961-011B	CASSETTE DOOR,C
			LP20961-007B	CASSETTE DOOR,A,B,D
		501B	PQ46448	TORSION SPRING
	⚠	502	LP10013-023D	TOP COVER,C
	⚠		LP10013-051A	TOP COVER,A,B,D
		503	QYTDSF3010M	SCREW,X4 TOP COVER(SIDE),C
			QYTDSF3010R	SCREW,X4 TOP COVER(SIDE),A,B,D
		504	QYTDSF3010M	SCREW,TOP COVER(REAR)
		505	LP20981-011A	DRUM SUB ASSY
		505E	LP40323-001A	CONTACT
		505F	LP30004-014A	COMPRESSION SPRING
		506	PDZ0179-1-4	ROTOR ASSY
		507	QYSPSP3006Z	SCREW,X2
	⚠	508	QAR0169-002	STATOR ASSY
		509	QYSPSPH2606Z	SCREW,X2
		510	QYTDST2610Z	SCREW,X3 DRUM
	⚠	511	LP10108-016E	BOTTOM CHASSIS
		512	LP10014-002B	BOTTOM COVER
		513	LP30312-001B	BRACKET(CHASSIS)
		514	QYTDSF3010Z	SCREW,X2
		515	LP40700-001A	SPACIAL SCREW,MECHA
		516	QYTDSF3010Z	SCREW,X2 MECHA
	⚠	517	QMP4A10-170	POWER CORD,A,B,C
	⚠		QMP51K0-170-K	POWER CORD,D
		519	LP40407-001A	KNOB ASSY
		520	LP40370-001E	ROLLER ARM ASSY
		520A	PDM4311A-1	ROLLER ASSY
		521	PQ45160	INERTIA PLATE
		522	LP40226-001A	PC SUPPORT,X2
		524	LP40253-001B	STOPPER
		525	PQ40413	SPECIAL SCREW,MECHA
		529	LP31019-001C	KNOB ASSY,A,B,D
			LP31019-004C	KNOB ASSY,C
		530	QYTDSF3010Z	SCREW,MAIN
		531	DPSF3010Z	SCREW,X3 MAIN
		533	QYTPSFG2608Z	SCREW,X2 A/J
		534	QYTDSF2608Z	SCREW,X2 S JACK
		WR1	QUQ212-0524CG	FFC WIRE,DRUM CN3001
		WR2	WJT0005-001A	E-CARD WIRE,A/C HEAD CN2001
		WR3	QUQ112-0914CG	FFC WIRE,A/J CN7001
		WR4	QUQ212-0456CG	FFC WIRE,S JACK CN916

5.3 MECHANISM ASSEMBLY <M4>

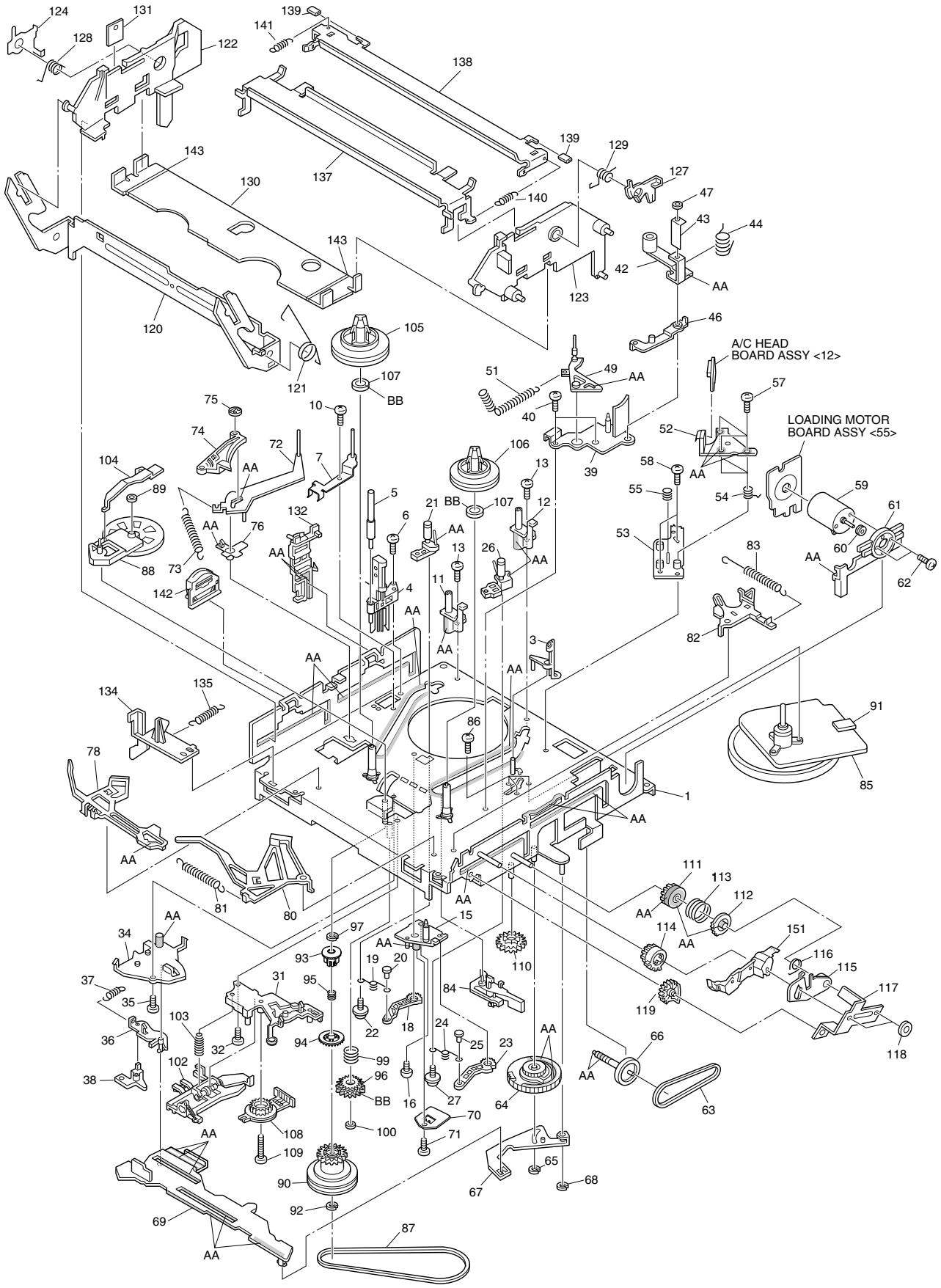

Classification	Part No.	Symbol in drawing
Grease	KYODO-SH-P	AA
Oil	COSMO-HV56	BB

NOTE: The section marked in **AA** and **BB** indicate lubrication and greasing areas.

#	⚠	REF No.	PART No.	PART NAME, DESCRIPTION

****

MECHANISM ASSEMBLY <M4>

		1	LP20821-006A	MAIN DECK ASSY
		3	LP30492-002B	GUIDE POLE GUARD
		4	NAH0001-001	FULL ERASE HEAD
		5	LP40098-001B	GUIDE POLE(SUPPLY)
		6	QYTDST2608Z	SCREW,FE HEAD
		7	LP40637-002A	TENSION STUD BASE ASSY
		10	QYTDST2606Z	SCREW
		11	LP30409-002C	UV CATCHER 2(SUPPLY)
		12	LP30409-002C	UV CATCHER 2(TAKE UP)
		13	QYTPST2606Z	SCREW,X2
		15	LP30223-003C	LOADING ARM GEAR SHAFT
		16	QYTDST2606Z	SCREW
		18	LP30224-001B	LOADING ARM GEAR(SUPPLY)
		19	LP40099-001A	TORSION ARM
		20	LP40100-001A	PIN
		21	LP40101-006A	POLE BASE ASSY(SUPPLY)
		22	QYSPSTG2606Z	SCREW
		23	LP40103-002B	LOADING ARM GEAR(TAKE UP)
		24	LP40099-001A	TORSION ARM
		25	LP40100-002A	PIN
		26	LP40104-006A	POLE BASE ASSY(TAKE UP)
		27	QYSPSTG2606Z	SCREW
		31	LP20233-004B	ROTARY ENCODER GUIDE
		32	QYTPST2606Z	SCREW
		34	LP30226-004E	CONTROL PLATE GUIDE
		35	QYTPST2605Z	SCREW
		36	LP30249-003B	TAKE UP LEVER
		37	LP30003-006A	TENSION SPRING
		38	LP40119-002A	TAKE UP HEAD
		39	LP20234-004B	LID GUIDE
		40	QYTDST2606Z	SCREW,X2
		42	LP40105-003A	PINCH ROLLER ARM ASSY
		43	LP40753-001A	PINCH ROLLER SHEET3
		44	LP40148-002A	TORSION SPRING
		46	LP40149-001C	PRESS LEVER ASSY
		49	LP40106-007A	GUIDE ARM ASSY
		51	LP40134-002A	TENSION SPRING
		52	QAH0058-001	AC HEAD
		53	LP30228-001C	HEAD BASE
		54	LP30004-013A	COMPRESSION SPRING,X3
		55	LP40236-001A	COMPRESSION SPRING
		57	LP40213-002B	SPECIAL SCREW,X3
		58	QYTDST2608Z	SCREW,X2
		59	QAR0023-001	LOADING MOTOR
		60	PQ43546-1-2	MOTOR PULLEY
		61	LP30230-001B	MOTOR GUIDE
		62	QYTPSP3003Z	SCREW,X2
		63	LP30005-003A	BELT,LOADING MOTOR
		64	LP20791-002D	CONTROL CAM
		65	PQM30017-24	SLIT WASHER
		66	LP40120-001A	WORM GEAR
		67	LP40107-002A	LINK LEVER ASSY
		68	PQM30017-24	SLIT WASHER
		69	LP10201-003G	CONTROL PLATE
		70	LP40379-001B	CONTROL BRACKET(1)
		71	QYTDSF2608M	SCREW
		72	LP40108-002A	TENSION ARM ASSY
		73	LP30003-010A	TENSION SPRING
		74	LP40109-003D	TENSION BRAKE ASSY
		75	PQ46302-1-3	ADJUST PIN
		76	LP30232-002A	TENSION ARM BEARING
		78	LP40532-008B	MAIN BRAKE ASSY (SUPPLY)
		80	LP40111-011A	MAIN BRAKE ASSY (TAKE UP)
		81	LP30003-026A	TENSION SPRING
		82	LP40112-001F	SUB BRAKE ASSY(TAKE UP)
		83	LP40357-002A	TENSION SPRING
		84	LP40461-001A	CAPSTAN BRAKE ASSY
		85	QAR0087-005	CAPSTAN MOTOR
		86	QYTDSF2606M	SCREW,X3
		87	LP30005-007A	BELT,CAPSTAN MOTOR
		88	LP40114-012A	IDLER ARM ASSY
		89	LP40599-001A	WASHER
		90	LP40593-001A	CLUTCH UNIT 3
		91	LP30002-097A	SPACER,CAPSTAN MOTOR
		92	PQM30017-47	SLIT WASHER
		93	LP30696-002A	CLUTCH GEAR 4
		94	LP30697-003A	COUPLING GEAR
		95	LP40554-002A	COMPRESSION SPRING
		96	LP40442-001A	DIRECT GEAR
		97	LP30017-019A	SPACER
		99	LP40483-002A	COMPRESSION SPRING
		100	LP30016-001A	SLIT WASHER
		102	LP40484-001J	CHANGE LEVER ASSY
		103	LP40512-002B	COMPRESSION SPRING
		104	LP30236-002C	IDLER LEVER
		105	LP20237-001B	REEL DISK (SUPPLY)
		106	LP20238-001B	REEL DISK (TAKE UP)
		107	LP30017-015A	SPACER,X2
		108	QSW0554-003	ROTARY ENCODER
		109	QYTPST2620Z	SCREW
		110	LP30237-002B	CASSETTE GEAR
		111	LP30239-002G	LIMIT GEAR(1)
		112	LP30240-002G	LIMIT GEAR(2)
		113	LP40136-001E	TORSION SPRING
		114	LP30242-002A	RELAY GEAR
		115	LP30339-002E	OPENER GUIDE
		116	LP40545-001A	TORSION SPRING
		117	LP40214-001B	C.H.BRACKET
		118	PQM30017-47	SLIT WASHER,X2
		119	LP30243-002A	DRIVE GEAR
		120	LP20240-001G	DRIVE ARM
		121	LP40137-001A	TORSION SPRING
		122	LP10081-002L	SIDE HOLDER(L)
		123	LP10082-002M	SIDE HOLDER(R)
		124	LP30255-006A	LOCK LEVER(L)
		127	LP30256-001H	LOCK LEVER(R)
		128	LP40168-003A	TORSION SPRING(L)
		129	LP40218-001B	TORSION SPRING(R)
		130	LP30257-001G	CASSETTE HOLDER
		131	LP40852-001A	EARTH PLATE
		132	LP30244-002G	GUIDE RAIL
		134	LP30245-002F	REC SAFETY LEVER
		135	LP30003-004A	TENSION SPRING
		137	LP20578-001C	TOP GUIDE
		138	LP30500-001C	HOLD PLATE
		139	LP40450-003A	PAD,X2
		140	LP30003-025B	TENSION SPRING
		141	LP30003-024A	TENSION SPRING
		142	LP40481-003A	ROLLER CAM ASSY
		143	LP30019-014A	PAD,X2
		152	LP20324-003B	DOOR OPENER

5.4 ELECTRICAL PARTS LIST

#	⚠ REF No.	PART No.	PART NAME, DESCRIPTION
**********			

MAIN BOARD ASSEMBLY <03>

	PW1	LPA10140-01B	MAIN BOARD ASSY
	IC1	JCP8050-MSA	IC
	IC201	LC74775-9750	IC
	IC3001	HD6432194SBD11F	IC (MCU)
	IC3002	IC-PST3427U-X	IC
	IC3003	24LC32A-I/SN-X	IC
		or HN58X2432FPI	IC
		or BR24C32F	IC
	IC3004	BA6956AN	IC
	IC5301	L5431	IC
		or MM1431AT	IC
		or UTCTL431	IC
	IC7001	PT6312LQ	IC
		or UPD16312GB/H/	IC
	IC7003	GP1U291Q	IR DETECT UNIT
		or PIC-28143LJ	IR DETECT UNIT
		or PIC-37143LJ	IR DETECT UNIT
		or PNA4652M00YC	IR DETECT UNIT
	Q1	2SC4081/S/-X	TRANSISTOR
	Q2	2SC4081/S/-X	TRANSISTOR
	Q3	2SC4081/S/-X	TRANSISTOR
	Q4	2SC4081/S/-X	TRANSISTOR
	Q5	2SB1218A/QR/-X	TRANSISTOR
		or 2SA1576A/QR/-X	TRANSISTOR
		or 2PA1576/R/-X	TRANSISTOR
	Q7	2SD1819A/QRS/-X	TRANSISTOR
		or 2SC4081/QRS/-X	TRANSISTOR
		or 2PC4081/R/-X	TRANSISTOR
	Q8	2SD1819A/QRS/-X	TRANSISTOR
		or 2PC4081/R/-X	TRANSISTOR
		or 2SC4081/QRS/-X	TRANSISTOR
	Q9	2SB1218A/QR/-X	TRANSISTOR
		or 2SA1576A/QR/-X	TRANSISTOR
		or 2PA1576/R/-X	TRANSISTOR
	Q10	2SA1576A/QR/-X	TRANSISTOR
	Q11	DTC144WU	TRANSISTOR
		or PDTC144WU	TRANSISTOR
		or RN1309	TRANSISTOR
		or UN521E	TRANSISTOR
	Q17	DTC144WU	TRANSISTOR
		or PDTC144WU	TRANSISTOR
		or RN1309	TRANSISTOR
		or UN521E	TRANSISTOR
	Q18	2SB1218A/QR/-X	TRANSISTOR
		or 2SA1576A/QR/-X	TRANSISTOR
		or 2PA1576/R/-X	TRANSISTOR
	Q21	2SB1218A/QR/-X	TRANSISTOR
		or 2PA1576/R/-X	TRANSISTOR
		or 2SA1576A/QR/-X	TRANSISTOR
	Q24	2SB1218A/QR/-X	TRANSISTOR
		or 2SA1576A/QR/-X	TRANSISTOR
		or 2PA1576/R/-X	TRANSISTOR
	Q38	2SD1819A/QRS/-X	TRANSISTOR
		or 2SC4081/QRS/-X	TRANSISTOR
		or 2PC4081/R/-X	TRANSISTOR
	Q40	DTC144WU	TRANSISTOR
		or PDTC144WU	TRANSISTOR
		or RN1309	TRANSISTOR
		or UN521E	TRANSISTOR
	Q41	DTC144WU	TRANSISTOR
		or PDTC144WU	TRANSISTOR
		or RN1309	TRANSISTOR
		or UN521E	TRANSISTOR
	Q207	2SB1218A/QR/-X	TRANSISTOR
		or 2SA1576A/QR/-X	TRANSISTOR
		or 2PA1576/R/-X	TRANSISTOR
	Q208	2SD1819A/QRS/-X	TRANSISTOR
		or 2PC4081/R/-X	TRANSISTOR
		or 2SC4081/QRS/-X	TRANSISTOR
	Q2001	2SC4081/QRS/-X	TRANSISTOR
		or 2SD1819A/QRS/-X	TRANSISTOR
		or 2PC4081/R/-X	TRANSISTOR
	Q2002	2SC4081/QRS/-X	TRANSISTOR
		or 2PC4081/R/-X	TRANSISTOR
		or 2SD1819A/QRS/-X	TRANSISTOR
	Q2003	DTA144WU	TRANSISTOR
		or PDTA144WU	TRANSISTOR
		or RN2309	TRANSISTOR
		or UN511E	TRANSISTOR
	Q2004	DTC114EU	TRANSISTOR
		or PDTC114EU	TRANSISTOR
		or RN1302	TRANSISTOR
		or UN5211	TRANSISTOR
	Q2051	2SC4081/QRS/-X	TRANSISTOR
		or 2SD1819A/QRS/-X	TRANSISTOR
		or 2PC4081/R/-X	TRANSISTOR
	Q2052	2SA1576A/QR/-X	TRANSISTOR
		or 2PA1576/R/-X	TRANSISTOR
		or 2SB1218A/QR/-X	TRANSISTOR
	Q2053	DTC144WU	TRANSISTOR
		or PDTC144WU	TRANSISTOR
		or RN1309	TRANSISTOR
		or UN521E	TRANSISTOR
	Q2054	2SA1576A/QR/-X	TRANSISTOR
		or 2SB1218A/QR/-X	TRANSISTOR
		or 2PA1576/R/-X	TRANSISTOR
	Q2055	DTC144WU	TRANSISTOR
		or PDTC144WU	TRANSISTOR
		or RN1309	TRANSISTOR
		or UN521E	TRANSISTOR
	Q2251	DTA144WU	TRANSISTOR
		or UN511E	TRANSISTOR
		or RN2309	TRANSISTOR
		or PDTA144WU	TRANSISTOR
	Q2252	DTC114EU	TRANSISTOR
		or PDTC114EU	TRANSISTOR
		or RN1302	TRANSISTOR
		or UN5211	TRANSISTOR
	Q3001	2SD1819A/QRS/-X	TRANSISTOR
		or 2PC4081/R/-X	TRANSISTOR
		or 2SC4081/QRS/-X	TRANSISTOR
	Q3002	PTZ-NV16	PHOTO TRANSISTOR
		or PTZ-NV16A	PHOTO TRANSISTOR
	Q3003	PTZ-NV16	PHOTO TRANSISTOR
		or PTZ-NV16A	PHOTO TRANSISTOR
	Q3004	2SD1819A/QRS/-X	TRANSISTOR
		or 2SC4081/QRS/-X	TRANSISTOR
		or 2PC4081/R/-X	TRANSISTOR
	Q3005	2SD1819A/QRS/-X	TRANSISTOR

# ⚠ REF No.	PART No.	PART NAME, DESCRIPTION
	or 2SC4081/QRS/-X	TRANSISTOR
	or 2PC4081/R/-X	TRANSISTOR
Q3007	UN521E	TRANSISTOR
	or RN1309	TRANSISTOR
	or DTC144WU	TRANSISTOR
	or PDTC144WU	TRANSISTOR
Q4001	UN5211	TRANSISTOR
	or RN1302	TRANSISTOR
	or DTC114EU	TRANSISTOR
	or PDTC114EU	TRANSISTOR
Q5101	2SK2632-CB14	POWER MOS FET
	or 2SK2632	POWER MOS FET
	or 2SK2129	POWER MOS FET
	or 2SK2129-LT	POWER MOS FET
Q5102	2SD2144S/UV/-T	TRANSISTOR
Q5301	2SB1256	TRANSISTOR
Q5302	2SD2375/QP/	TRANSISTOR
Q5303	2SD1819A/RS/-X	TRANSISTOR
	or 2SC4081/RS/-X	TRANSISTOR
	or 2PC4081/R/-X	TRANSISTOR
Q5304	2SC3616/ML/-T	TRANSISTOR
Q5305	DTA114EU	TRANSISTOR
	or RN2302	TRANSISTOR
	or UN5111	TRANSISTOR
	or PDTA114EU	TRANSISTOR
Q5306	DTC114EU	TRANSISTOR
	or PDTC114EU	TRANSISTOR
	or UN5211	TRANSISTOR
	or RN1302	TRANSISTOR
Q5308	2SA1576A/RS/-X	TRANSISTOR
Q5311	DTC114TU	TRANSISTOR
	or PDTC114TU	TRANSISTOR
	or RN1311	TRANSISTOR
	or UN5215	TRANSISTOR
Q5312	2SD2144S/UV/-T	TRANSISTOR
Q5318	DTA114EU	TRANSISTOR
	or PDTA114EU	TRANSISTOR
	or RN2302	TRANSISTOR
	or UN5111	TRANSISTOR
Q5320	DTC114EU	TRANSISTOR
	or PDTC114EU	TRANSISTOR
	or UN5211	TRANSISTOR
	or RN1302	TRANSISTOR
Q5322	DTC114TU	TRANSISTOR
	or PDTC114TU	TRANSISTOR
	or RN1311	TRANSISTOR
	or UN5215	TRANSISTOR
Q5323	2SB927/ST/-T	TRANSISTOR
Q6030	2SB1218A/QR/-X	TRANSISTOR
	or 2SA1576A/QR/-X	TRANSISTOR
	or 2PA1576/R/-X	TRANSISTOR
Q6031	DTC114EU	TRANSISTOR
	or PDTC114EU	TRANSISTOR
	or RN1302	TRANSISTOR
	or UN5211	TRANSISTOR
Q6032	DTC114EU	TRANSISTOR
	or PDTC114EU	TRANSISTOR
	or UN5211	TRANSISTOR
	or RN1302	TRANSISTOR
Q7201	2SC1317/RS/-T	TRANSISTOR
D1	DA204U	DIODE

# ⚠ REF No.	PART No.	PART NAME, DESCRIPTION	
D6	MTZJ5.1C	ZENER DIODE	
D201	QRE141J-152Y	RESISTOR	1.5kΩ,1/4W
D202	QRE141J-101Y	RESISTOR	100Ω,1/4W
D203	QRE141J-101Y	RESISTOR	100Ω,1/4W
D2202	MTZJ8.2C	ZENER DIODE	
D3001	LNB2301L01VI	LE DIODE	
D3002	1SS133	DIODE	
	or 1SS270A	DIODE	
D3003	RD39ES/B3/-T2	ZENER DIODE	
	or MTZJ39C	ZENER DIODE	
D3004	11ES2	DIODE	
	or 1A3G	DIODE	
D3005	11ES2	DIODE	
	or 1A3G	DIODE	
D3008	1SS355	DIODE	
D4001	QUY153-050Y	IM BUS WIRE	
D4002	QUY153-050Y	IM BUS WIRE	
D5001	S1WB/A/60-4102	BRIDGE DIODE	
	or S1WB/A/60-X	BRIDGE DIODE	
	or S1WB(A)60F4072X	BRIDGE DIODE	
D5101	AU01	FR DIODE	
	or ERA18-04-T2	FR DIODE	
	or 1SR153-400-T2	FR DIODE	
	or 10ELS4	FR DIODE	
D5102	AU01	FR DIODE	
	or ERA18-04-T2	FR DIODE	
	or 1SR153-400-T2	FR DIODE	
	or 10ELS4	FR DIODE	
D5103	1SS133	DIODE	
	or 1SS270A	DIODE	
D5105	1SS133	DIODE	
	or 1SS270A	DIODE	
D5201	AU01Z	FR DIODE	
	or 10ELS2	FR DIODE	
D5203	AU01Z	FR DIODE	
	or 10ELS2	FR DIODE	
D5204	AU01Z	FR DIODE	
	or 10ELS2	FR DIODE	
D5206	FMB-24	BARRIER DIODE	
	or SB640FCT	SB DIODE	
	or SF5SC4	SB DIODE	
	or FSQ05A04B	SB DIODE	
	or YG801C04	SB DIODE	
D5209	ERA18-02-T2	FR DIODE	
	or PG104RS	FR DIODE	
	or 1SR153-400-T2	FR DIODE	
	or 10ELS2	FR DIODE	
D5210	AU01Z	FR DIODE	
	or ERA18-02-T2	FR DIODE	
	or PG104RS	FR DIODE	
	or 10ELS2	FR DIODE	
	or 1SR153-400-T2	FR DIODE	
D5211	AU01Z	FR DIODE	
	or ERA18-02-T2	FR DIODE	
	or 10ELS2	FR DIODE	
	or 1SR153-400-T2	FR DIODE	
	or PG104RS	FR DIODE	
D5301	MTZJ15C	ZENER DIODE	
	or RD15ES/B3/-T2	ZENER DIODE	
D5302	1SS133	DIODE	
	or 1SS270A	DIODE	

# ⚠ REF No.	PART No.	PART NAME, DESCRIPTION	
D5303	RD5.1JS/B2/-T2	ZENER DIODE	
	or MA4051N/M/-T2	ZENER DIODE	
D5304	1SS133	DIODE	
	or 1SS270A	DIODE	
D5305	AK04	DIODE	
	or 1S4	SB DIODE	
	or 11EQS04	SB DIODE	
D5307	11ES2	DIODE	
	or 1A3G	DIODE	
	or ERA15-02-T2	DIODE	
D5308	MTZJ11B	ZENER DIODE	
	or RD11ES/B2/-T2	ZENER DIODE	
D5309	MTZJ27C	ZENER DIODE	
	or RD27ES/B3/-T2	ZENER DIODE	
D5310	1SS133	DIODE	
	or 1SS270A	DIODE	
D5316	QUY160-100Y	IM BUS WIRE	
D5317	1SS133	DIODE	
	or 1SS270A	DIODE	
D5318	11ES2	DIODE	
	or ERA15-02-T2	DIODE	
	or 1A3G	DIODE	
D5319	11ES2	DIODE	
	or 1A3G	DIODE	
	or ERA15-02-T2	DIODE	
D6002	HZ30-2L-T2	ZENER DIODE	
	or HZ30-2LTD	Z DIODE (M)	
D7001	RD9.1ES/B2/-T2	ZENER DIODE	
	or MTZJ9.1B	ZENER DIODE	
	or UZ9.1BSB	ZENER DIODE	
D7003	1SS133	DIODE	
	or 1SS270A	DIODE	
D7004	1SS133	DIODE	
	or 1SS270A	DIODE	
D7005	1SS133	DIODE	
	or 1SS270A	DIODE	
D7008	SLR-325MC-T	LE DIODE	
D7009	SLR-325VC-T	LE DIODE	
R1	NRVA02D-682X	CMF RESISTOR	6.8kΩ,1/10W
R2	NRVA02D-152X	CMF RESISTOR	1.5kΩ,1/10W
R3	NRSA02J-182X	MG RESISTOR	1.8kΩ,1/10W
R4	NRSA02J-0R0X	MG RESISTOR	0Ω,1/10W
R5	NRSA02J-0R0X	MG RESISTOR	0Ω,1/10W
R6	NRSA02J-273X	MG RESISTOR	27kΩ,1/10W
R7	NRSA02J-681X	MG RESISTOR	680Ω,1/10W
R8	NRSA02J-0R0X	MG RESISTOR	0Ω,1/10W
R9	NRSA02J-0R0X	MG RESISTOR	0Ω,1/10W
R21	NRSA02J-0R0X	MG RESISTOR	0Ω,1/10W
R22	NRSA02J-0R0X	MG RESISTOR	0Ω,1/10W
R23	NRSA02J-182X	MG RESISTOR	1.8kΩ,1/10W
R25	NRSA02J-103X	MG RESISTOR	10kΩ,1/10W
R26	NRSA02J-682X	MG RESISTOR	6.8kΩ,1/10W
R27	NRSA02J-221X	MG RESISTOR	220Ω,1/10W
R28	NRSA02J-221X	MG RESISTOR	220Ω,1/10W
R29	NRSA02J-561X	MG RESISTOR	560Ω,1/10W
R30	NRSA02J-0R0X	MG RESISTOR	0Ω,1/10W
R31	NRSA02J-152X	MG RESISTOR	1.5kΩ,1/10W
R32	NRSA02J-471X	MG RESISTOR	470Ω,1/10W
R33	NRSA02J-153X	MG RESISTOR	15kΩ,1/10W
R36	NRSA02J-182X	MG RESISTOR	1.8kΩ,1/10W
R38	NRSA02J-102X	MG RESISTOR	1kΩ,1/10W

# ⚠ REF No.	PART No.	PART NAME, DESCRIPTION	
R39	NRSA02J-103X	MG RESISTOR	10kΩ,1/10W
R40	NRSA02J-222X	MG RESISTOR	2.2kΩ,1/10W
R41	NRSA02J-392X	MG RESISTOR	3.9kΩ,1/10W
R42	NRSA02J-681X	MG RESISTOR	680Ω,1/10W
R46	NRSA02J-561X	MG RESISTOR	560Ω,1/10W
R48	QRE141J-102Y	RESISTOR	1kΩ,1/4W
R51	NRSA02J-122X	MG RESISTOR	1.2kΩ,1/10W
R54	NRSA02J-152X	MG RESISTOR	1.5kΩ,1/10W
R62	NRSA02J-101X	MG RESISTOR	100Ω,1/10W
R70	NRSA02J-0R0X	MG RESISTOR	0Ω,1/10W
R77	NRSA02J-103X	MG RESISTOR	10kΩ,1/10W
R88	NRSA02J-0R0X	MG RESISTOR	0Ω,1/10W
R90	NRSA02J-391X	MG RESISTOR	390Ω,1/10W
R92	NRSA02J-152X	MG RESISTOR	1.5kΩ,1/10W
R93	NRSA02J-222X	MG RESISTOR	2.2kΩ,1/10W
R104	NRSA02J-682X	MG RESISTOR	6.8kΩ,1/10W
R113	NRSA02J-101X	MG RESISTOR	100Ω,1/10W
R118	NRSA02J-0R0X	MG RESISTOR	0Ω,1/10W
R201	NRSA02J-0R0X	MG RESISTOR	0Ω,1/10W
R202	NRSA02J-103X	MG RESISTOR	10kΩ,1/10W
R208	NRSA02J-222X	MG RESISTOR	2.2kΩ,1/10W
R209	NRSA02J-512X	MG RESISTOR	5.1kΩ,1/10W
R210	NRSA02J-182X	MG RESISTOR	1.8kΩ,1/10W
R211	NRSA02J-562X	MG RESISTOR	5.6kΩ,1/10W
R212	NRSA02J-101X	MG RESISTOR	100Ω,1/10W
R213	QRE141J-0R0Y	RESISTOR	0Ω,1/4W
R216	NRSA02J-103X	MG RESISTOR	10kΩ,1/10W
R224	NRSA02J-101X	MG RESISTOR	100Ω,1/10W
R225	NRSA02J-471X	MG RESISTOR	470Ω,1/10W
R226	NRSA02J-102X	MG RESISTOR	1kΩ,1/10W
R2001	NRSA02J-681X	MG RESISTOR	680Ω,1/10W
R2002	NRSA02J-272X	MG RESISTOR	2.7kΩ,1/10W
R2003	NRSA02J-101X	MG RESISTOR	100Ω,1/10W
R2005	NRSA02J-0R0X	MG RESISTOR	0Ω,1/10W
R2006	NRSA02J-393X	MG RESISTOR	39kΩ,1/10W
R2007	NRSA02J-393X	MG RESISTOR	39kΩ,1/10W
R2008	NRSA02J-123X	MG RESISTOR	12kΩ,1/10W
R2009	NRSA02J-123X	MG RESISTOR	12kΩ,1/10W
R2010	NRSA02J-123X	MG RESISTOR	12kΩ,1/10W
R2013	NRSA02J-682X	MG RESISTOR	6.8kΩ,1/10W
R2014	NRSA02J-224X	MG RESISTOR	220kΩ,1/10W
R2015	NRSA02J-181X	MG RESISTOR	180Ω,1/10W
R2016	NRSA02J-393X	MG RESISTOR	39kΩ,1/10W
R2017	NRSA02J-183X	MG RESISTOR	18kΩ,1/10W
R2018	NRSA02J-472X	MG RESISTOR	4.7kΩ,1/10W
R2019	NRSA02J-472X	MG RESISTOR	4.7kΩ,1/10W
R2053	NRSA02J-472X	MG RESISTOR	4.7kΩ,1/10W
R2054	NRSA02J-123X	MG RESISTOR	12kΩ,1/10W
R2055	NRSA02J-3R3X	MG RESISTOR	3.3Ω,1/10W
R2056	NRSA02J-820X	MG RESISTOR	82Ω,1/10W
R2057	NRSA02J-473X	MG RESISTOR	47kΩ,1/10W
R2058	NRSA02J-183X	MG RESISTOR	18kΩ,1/10W
R2059	NRSA02J-473X	MG RESISTOR	47kΩ,1/10W
R2060	NRSA02J-183X	MG RESISTOR	18kΩ,1/10W
R2201	QRE141J-121Y	RESISTOR	120Ω,1/4W
R2202	NRSA02J-222X	MG RESISTOR	2.2kΩ,1/10W
R2203	NRSA02J-222X	MG RESISTOR	2.2kΩ,1/10W
R2204	NRSA02J-102X	MG RESISTOR	1kΩ,1/10W
R2205	NRSA02J-102X	MG RESISTOR	1kΩ,1/10W
R2206	NRSA02J-101X	MG RESISTOR	100Ω,1/10W
R2208	NRSA02J-101X	MG RESISTOR	100Ω,1/10W

# ⚠ REF No.	PART No.	PART NAME, DESCRIPTION	
R2209	NRSA02J-101X	MG RESISTOR	100Ω,1/10W
R2210	NRSA02J-103X	MG RESISTOR	10kΩ,1/10W
R2211	NRSA02J-103X	MG RESISTOR	10kΩ,1/10W
R2213	NRSA02J-393X	MG RESISTOR	39kΩ,1/10W
R2215	NRSA02J-153X	MG RESISTOR	15kΩ,1/10W
R2217	NRSA02J-0R0X	MG RESISTOR	0Ω,1/10W
R2218	NRSA02J-393X	MG RESISTOR	39kΩ,1/10W
R2219	NRSA02J-393X	MG RESISTOR	39kΩ,1/10W
R2220	NRSA02J-393X	MG RESISTOR	39kΩ,1/10W
R2222	NRSA02J-123X	MG RESISTOR	12kΩ,1/10W
R2223	NRSA02J-123X	MG RESISTOR	12kΩ,1/10W
R2224	NRSA02J-123X	MG RESISTOR	12kΩ,1/10W
R2225	NRSA02J-153X	MG RESISTOR	15kΩ,1/10W
R2226	NRSA02J-123X	MG RESISTOR	12kΩ,1/10W
R2227	NRSA02J-123X	MG RESISTOR	12kΩ,1/10W
R2228	NRSA02J-103X	MG RESISTOR	10kΩ,1/10W
R2229	NRSA02J-563X	MG RESISTOR	56kΩ,1/10W
R2251	NRSA02J-102X	MG RESISTOR	1kΩ,1/10W
R3011	NRSA02J-102X	MG RESISTOR	1kΩ,1/10W
R3012	NRSA02J-102X	MG RESISTOR	1kΩ,1/10W
R3013	NRSA02J-102X	MG RESISTOR	1kΩ,1/10W
R3014	NRSA02J-102X	MG RESISTOR	1kΩ,1/10W
R3015	NRSA02J-102X	MG RESISTOR	1kΩ,1/10W
R3016	NRSA02J-102X	MG RESISTOR	1kΩ,1/10W
R3017	NRSA02J-102X	MG RESISTOR	1kΩ,1/10W
R3018	NRSA02J-682X	MG RESISTOR	6.8kΩ,1/10W
R3019	NRSA02J-102X	MG RESISTOR	1kΩ,1/10W
R3020	NRSA02J-102X	MG RESISTOR	1kΩ,1/10W
R3021	NRSA02J-102X	MG RESISTOR	1kΩ,1/10W
R3022	NRSA02J-102X	MG RESISTOR	1kΩ,1/10W
R3025	NRSA02J-102X	MG RESISTOR	1kΩ,1/10W
R3026	NRSA02J-102X	MG RESISTOR	1kΩ,1/10W
R3027	NRSA02J-102X	MG RESISTOR	1kΩ,1/10W
R3029	NRSA02J-102X	MG RESISTOR	1kΩ,1/10W
R3030	NRSA02J-102X	MG RESISTOR	1kΩ,1/10W
R3031	NRSA02J-102X	MG RESISTOR	1kΩ,1/10W
R3032	NRSA02J-102X	MG RESISTOR	1kΩ,1/10W
R3033	NRSA02J-0R0X	MG RESISTOR	0Ω,1/10W
R3034	NRSA02J-0R0X	MG RESISTOR	0Ω,1/10W
R3035	NRSA02J-0R0X	MG RESISTOR	0Ω,1/10W
R3036	NRSA02J-0R0X	MG RESISTOR	0Ω,1/10W
R3038	NRSA02J-152X	MG RESISTOR	1.5kΩ,1/10W
R3039	NRSA02J-102X	MG RESISTOR	1kΩ,1/10W
R3040	NRSA02J-472X	MG RESISTOR	4.7kΩ,1/10W
R3041	NRSA02J-0R0X	MG RESISTOR	0Ω,1/10W
R3042	NRSA02J-0R0X	MG RESISTOR	0Ω,1/10W
R3044	NRSA02J-0R0X	MG RESISTOR	0Ω,1/10W
R3046	NRSA02J-102X	MG RESISTOR	1kΩ,1/10W
R3047	NRSA02J-102X	MG RESISTOR	1kΩ,1/10W
R3048	NRSA02J-0R0X	MG RESISTOR	0Ω,1/10W
R3049	NRSA02J-0R0X	MG RESISTOR	0Ω,1/10W
R3050	NRSA02J-0R0X	MG RESISTOR	0Ω,1/10W
R3051	NRSA02J-471X	MG RESISTOR	470Ω,1/10W
R3052	NRSA02J-471X	MG RESISTOR	470Ω,1/10W
R3053	NRSA02J-471X	MG RESISTOR	470Ω,1/10W
R3054	NRSA02J-102X	MG RESISTOR	1kΩ,1/10W
R3055	NRSA02J-102X	MG RESISTOR	1kΩ,1/10W
R3056	NRSA02J-102X	MG RESISTOR	1kΩ,1/10W
R3057	NRSA02J-102X	MG RESISTOR	1kΩ,1/10W
R3058	NRSA02J-102X	MG RESISTOR	1kΩ,1/10W
R3059	NRSA02J-0R0X	MG RESISTOR	0Ω,1/10W

# ⚠ REF No.	PART No.	PART NAME, DESCRIPTION	
R3060	NRSA02J-102X	MG RESISTOR	1kΩ,1/10W
R3061	NRSA02J-102X	MG RESISTOR	1kΩ,1/10W
R3062	NRSA02J-103X	MG RESISTOR	10kΩ,1/10W
R3063	NRSA02J-0R0X	MG RESISTOR	0Ω,1/10W
R3066	NRSA02J-472X	MG RESISTOR	4.7kΩ,1/10W
R3069	NRSA02J-101X	MG RESISTOR	100Ω,1/10W
R3071	NRSA02J-103X	MG RESISTOR	10kΩ,1/10W
R3072	NRSA02J-0R0X	MG RESISTOR	0Ω,1/10W
R3073	NRSA02J-0R0X	MG RESISTOR	0Ω,1/10W
R3074	NRSA02J-0R0X	MG RESISTOR	0Ω,1/10W
R3075	NRSA02J-471X	MG RESISTOR	470Ω,1/10W
R3076	NRSA02J-471X	MG RESISTOR	470Ω,1/10W
R3077	NRSA02J-0R0X	MG RESISTOR	0Ω,1/10W
R3078	NRSA02J-0R0X	MG RESISTOR	0Ω,1/10W
R3079	NRSA02J-0R0X	MG RESISTOR	0Ω,1/10W
R3080	NRSA02J-0R0X	MG RESISTOR	0Ω,1/10W
R3081	NRSA02J-0R0X	MG RESISTOR	0Ω,1/10W
R3083	NRSA02J-0R0X	MG RESISTOR	0Ω,1/10W
R3085	NRSA02J-222X	MG RESISTOR	2.2kΩ,1/10W
R3086	NRSA02J-222X	MG RESISTOR	2.2kΩ,1/10W
R3087	NRSA02J-0R0X	MG RESISTOR	0Ω,1/10W
R3088	NRSA02J-0R0X	MG RESISTOR	0Ω,1/10W
R3089	NRSA02J-0R0X	MG RESISTOR	0Ω,1/10W
R3091	NRSA02J-0R0X	MG RESISTOR	0Ω,1/10W
R3092	NRSA02J-102X	MG RESISTOR	1kΩ,1/10W
R3093	NRSA02J-0R0X	MG RESISTOR	0Ω,1/10W
R3094	NRSA02J-0R0X	MG RESISTOR	0Ω,1/10W
R3095	NRSA02J-0R0X	MG RESISTOR	0Ω,1/10W
R3096	NRSA02J-0R0X	MG RESISTOR	0Ω,1/10W
R3097	NRSA02J-0R0X	MG RESISTOR	0Ω,1/10W
R3103	NRSA02J-0R0X	MG RESISTOR	0Ω,1/10W
R3104	NRSA02J-0R0X	MG RESISTOR	0Ω,1/10W
R3105	NRSA02J-0R0X	MG RESISTOR	0Ω,1/10W
R3106	NRSA02J-0R0X	MG RESISTOR	0Ω,1/10W
R3201	NRSA02J-103X	MG RESISTOR	10kΩ,1/10W
R3202	NRSA02J-472X	MG RESISTOR	4.7kΩ,1/10W
R3203	NRSA02J-103X	MG RESISTOR	10kΩ,1/10W
R3204	NRSA02J-222X	MG RESISTOR	2.2kΩ,1/10W
R3205	QRE141J-181Y	RESISTOR	180Ω,1/4W
R3206	NRSA02J-183X	MG RESISTOR	18kΩ,1/10W
R3207	QRE141J-183Y	RESISTOR	18kΩ,1/4W
R3208	NRSA02J-181X	MG RESISTOR	180Ω,1/10W
R3209	NRSA02J-273X	MG RESISTOR	27kΩ,1/10W
R3210	NRSA02J-181X	MG RESISTOR	180Ω,1/10W
R3211	NRSA02J-273X	MG RESISTOR	27kΩ,1/10W
R3212	QRE141J-474Y	RESISTOR	470kΩ,1/4W
R3213	NRSA02J-334X	MG RESISTOR	330kΩ,1/10W
R3214	NRSA02J-103X	MG RESISTOR	10kΩ,1/10W
R3215	NRSA02J-103X	MG RESISTOR	10kΩ,1/10W
R3216	NRSA02J-103X	MG RESISTOR	10kΩ,1/10W
R3217	QRE141J-562Y	RESISTOR	5.6kΩ,1/4W
R3218	QRE141J-472Y	RESISTOR	4.7kΩ,1/4W
R3219	NRSA02J-472X	MG RESISTOR	4.7kΩ,1/10W
R3220	NRSA02J-104X	MG RESISTOR	100kΩ,1/10W
R3222	NRSA02J-472X	MG RESISTOR	4.7kΩ,1/10W
R3223	NRSA02J-472X	MG RESISTOR	4.7kΩ,1/10W
R3224	NRSA02J-472X	MG RESISTOR	4.7kΩ,1/10W
R3225	NRSA02J-103X	MG RESISTOR	10kΩ,1/10W
R3229	NRSA02J-105X	MG RESISTOR	1MΩ,1/10W
R3230	NRSA02J-472X	MG RESISTOR	4.7kΩ,1/10W
R3231	NRSA02J-102X	MG RESISTOR	1kΩ,1/10W

#	⚠	REF No.	PART No.	PART NAME, DESCRIPTION	
		R3233	NRSA02J-103X	MG RESISTOR	10kΩ,1/10W
		R3234	NRSA02J-103X	MG RESISTOR	10kΩ,1/10W
		R3235	NRSA02J-332X	MG RESISTOR	3.3kΩ,1/10W
		R3236	NRSA02J-332X	MG RESISTOR	3.3kΩ,1/10W
		R3237	NRSA02J-103X	MG RESISTOR	10kΩ,1/10W
		R3238	NRSA02J-103X	MG RESISTOR	10kΩ,1/10W
		R3239	NRSA02J-103X	MG RESISTOR	10kΩ,1/10W
		R3240	NRSA02J-103X	MG RESISTOR	10kΩ,1/10W
		R3241	QRE141J-104Y	RESISTOR	100kΩ,1/4W
		R3242	NRSA02J-472X	MG RESISTOR	4.7kΩ,1/10W
		R4003	NRSA02J-561X	MG RESISTOR	560Ω,1/10W
		R4004	NRSA02J-561X	MG RESISTOR	560Ω,1/10W
		R4005	NRSA02J-562X	MG RESISTOR	5.6kΩ,1/10W
		R4007	NRSA02J-102X	MG RESISTOR	1kΩ,1/10W
		R4008	NRSA02J-102X	MG RESISTOR	1kΩ,1/10W
		R4009	NRSA02J-102X	MG RESISTOR	1kΩ,1/10W
		R4010	NRSA02J-103X	MG RESISTOR	10kΩ,1/10W
		R4011	NRSA02J-472X	MG RESISTOR	4.7kΩ,1/10W
		R4012	NRSA02J-222X	MG RESISTOR	2.2kΩ,1/10W
		R4013	NRSA02J-102X	MG RESISTOR	1kΩ,1/10W
		R4015	NRSA02J-562X	MG RESISTOR	5.6kΩ,1/10W
		R4017	NRSA02J-102X	MG RESISTOR	1kΩ,1/10W
		R4018	NRSA02J-102X	MG RESISTOR	1kΩ,1/10W
		R4019	NRSA02J-103X	MG RESISTOR	10kΩ,1/10W
		R4020	NRSA02J-103X	MG RESISTOR	10kΩ,1/10W
		R4021	NRSA02J-103X	MG RESISTOR	10kΩ,1/10W
		R5101	QRE141J-334Y	RESISTOR	330kΩ,1/4W
		R5102	QRE141J-334Y	RESISTOR	330kΩ,1/4W
		R5103	QRE141J-683Y	RESISTOR	68kΩ,1/4W
		R5104	QRG029J-154G	OMF RESISTOR	150kΩ,2W
		R5106	QRT01DJ-R39X	MF RESISTOR	0.39Ω,1W
		R5107	QRE121J-331Y	RESISTOR	330Ω,1/2W
		R5108	NRSA02J-122X	MG RESISTOR	1.2kΩ,1/10W
		R5109	QRE141J-681Y	RESISTOR	680Ω,1/4W
		R5110	NRSA02J-224X	MG RESISTOR	220kΩ,1/10W
		R5111	NRSA02J-561X	MG RESISTOR	560Ω,1/10W
		R5112	NRSA02J-221X	MG RESISTOR	220Ω,1/10W
		R5301	NRSA02J-472X	MG RESISTOR	4.7kΩ,1/10W
		R5302	NRSA02J-102X	MG RESISTOR	1kΩ,1/10W
		R5303	NRSA02J-122X	MG RESISTOR	1.2kΩ,1/10W
		R5304	NRSA02J-471X	MG RESISTOR	470Ω,1/10W
		R5305	NRSA02J-102X	MG RESISTOR	1kΩ,1/10W
		R5306	NRSA02J-221X	MG RESISTOR	220Ω,1/10W
		R5308	NRSA02J-471X	MG RESISTOR	470Ω,1/10W
		R5309	NRSA02J-103X	MG RESISTOR	10kΩ,1/10W
		R5310	NRSA02J-221X	MG RESISTOR	220Ω,1/10W
		R5311	NRSA02J-103X	MG RESISTOR	10kΩ,1/10W
		R5312	NRVA02D-332X	CMF RESISTOR	3.3kΩ,1/10W
		R5313	NRVA02D-332X	CMF RESISTOR	3.3kΩ,1/10W
		R5314	NRSA02J-102X	MG RESISTOR	1kΩ,1/10W
		R5316	NRVA02D-123X	CMF RESISTOR	12kΩ,1/10W
		R5317	NRSA02J-473X	MG RESISTOR	47kΩ,1/10W
	⚠	R5318	QRZ9005-221X	FUSI RESISTOR	220Ω,1/4W
		R5320	NRSA02J-273X	MG RESISTOR	27kΩ,1/10W
		R5321	NRSA02J-273X	MG RESISTOR	27kΩ,1/10W
		R5324	NRSA02J-472X	MG RESISTOR	4.7kΩ,1/10W
		R5325	QRE141J-222Y	RESISTOR	2.2kΩ,1/4W
		R5326	QUY153-050Y	IM BUS WIRE	
		R5327	NRSA02J-222X	MG RESISTOR	2.2kΩ,1/10W
		R5329	NRSA02J-102X	MG RESISTOR	1kΩ,1/10W
		R5330	NRSA02J-102X	MG RESISTOR	1kΩ,1/10W

#	⚠	REF No.	PART No.	PART NAME, DESCRIPTION	
		R5332	QRE141J-222Y	RESISTOR	2.2kΩ,1/4W
		R5344	NRSA02J-472X	MG RESISTOR	4.7kΩ,1/10W
		R5345	QRE121J-561Y	RESISTOR	560Ω,1/2W
		R6020	NRSA02J-102X	MG RESISTOR	1kΩ,1/10W
		R6021	NRSA02J-102X	MG RESISTOR	1kΩ,1/10W
		R6030	NRSA02J-102X	MG RESISTOR	1kΩ,1/10W
		R6031	NRSA02J-271X	MG RESISTOR	270Ω,1/10W
		R6032	NRSA02J-472X	MG RESISTOR	4.7kΩ,1/10W
		R6033	NRSA02J-182X	MG RESISTOR	1.8kΩ,1/10W
		R6050	QRE141J-101Y	RESISTOR	100Ω,1/4W
		R6051	NRSA02J-101X	MG RESISTOR	100Ω,1/10W
		R6052	NRSA02J-101X	MG RESISTOR	100Ω,1/10W
		R7001	NRSA02J-103X	MG RESISTOR	10kΩ,1/10W
		R7002	NRSA02J-103X	MG RESISTOR	10kΩ,1/10W
		R7003	NRSA02J-103X	MG RESISTOR	10kΩ,1/10W
		R7004	NRSA02J-103X	MG RESISTOR	10kΩ,1/10W
		R7005	NRSA02J-472X	MG RESISTOR	4.7kΩ,1/10W
		R7006	NRSA02J-471X	MG RESISTOR	470Ω,1/10W
		R7007	QRE141J-103Y	RESISTOR	10kΩ,1/4W
		R7008	QRE141J-563Y	RESISTOR	56kΩ,1/4W
		R7009	QRE141J-103Y	RESISTOR	10kΩ,1/4W
		R7010	NRSA02J-0R0X	MG RESISTOR	0Ω,1/10W
		R7011	NRSA02J-333X	MG RESISTOR	33kΩ,1/10W
		R7012	NRSA02J-333X	MG RESISTOR	33kΩ,1/10W
		R7013	NRSA02J-333X	MG RESISTOR	33kΩ,1/10W
		R7014	NRSA02J-333X	MG RESISTOR	33kΩ,1/10W
		R7015	QRE141J-472Y	RESISTOR	4.7kΩ,1/4W
		R7016	NRSA02J-103X	MG RESISTOR	10kΩ,1/10W
		R7017	NRSA02J-331X	MG RESISTOR	330Ω,1/10W
		R7018	NRSA02J-331X	MG RESISTOR	330Ω,1/10W
		R7160	NRSA02J-101X	MG RESISTOR	100Ω,1/10W
		R7161	NRSA02J-101X	MG RESISTOR	100Ω,1/10W
		R7162	NRSA02J-101X	MG RESISTOR	100Ω,1/10W
		R7163	NRSA02J-750X	MG RESISTOR	75Ω,1/10W
		R7202	NRSA02J-221X	MG RESISTOR	220Ω,1/10W
		R7203	NRSA02J-472X	MG RESISTOR	4.7kΩ,1/10W
		R7204	QRE121J-100Y	RESISTOR	10Ω,1/2W
		B3	NRSA02J-0R0X	MG RESISTOR	0Ω,1/10W
		B12	QUY160-220Y	IM BUS WIRE	
		B52	NRSA02J-0R0X	MG RESISTOR	0Ω,1/10W
		B65	NRSA02J-0R0X	MG RESISTOR	0Ω,1/10W
		B203	QUY153-050Y	IM BUS WIRE	
		B204	QUY153-050Y	IM BUS WIRE	
		B214	QUY160-280Y	IM BUS WIRE	
		B2051	QUY153-050Y	IM BUS WIRE	
		B3004	QUY160-120Y	IM BUS WIRE	
		B3179	NRSA02J-0R0X	MG RESISTOR	0Ω,1/10W
		B5302	NRSA02J-0R0X	MG RESISTOR	0Ω,1/10W
		B5304	NRSA02J-0R0X	MG RESISTOR	0Ω,1/10W
		C1	NCB21HK-103X	CAPACITOR	0.01μF,50V
		C2	NCB21HK-103X	CAPACITOR	0.01μF,50V
		C3	NCB21HK-103X	CAPACITOR	0.01μF,50V
		C4	NCB21HK-103X	CAPACITOR	0.01μF,50V
		C5	QEKJ0JM-476	E CAPACITOR	47μF,6.3V
		C6	QCBB1HK-103	CAPACITOR	0.01μF,50V
		C7	NCB21HK-102X	CAPACITOR	0.001μF,50V
		C8	NCB21EK-104X	CAPACITOR	0.1μF,25V
		C9	QEKJ1HM-225	E CAPACITOR	2.2μF,50V
		C10	NDC21HG-151X	CAPACITOR	150pF,50V
		C11	NCB21EK-104X	CAPACITOR	0.1μF,25V
		C12	NDC21HJ-8R0X	CAPACITOR	8pF,50V

# ⚠ REF No.	PART No.	PART NAME, DESCRIPTION	
C14	NCB21EK-104X	CAPACITOR	0.1μF,25V
C15	NCB21HK-103X	CAPACITOR	0.01μF,50V
C16	NCB21EK-104X	CAPACITOR	0.1μF,25V
C17	QEKJ1HM-335	E CAPACITOR	3.3μF,50V
C19	QEKJ1HM-225	E CAPACITOR	2.2μF,50V
C20	QEKJ1HM-105	E CAPACITOR	1μF,50V
C21	NCB21EK-104X	CAPACITOR	0.1μF,25V
C22	QEKJ0JM-476	E CAPACITOR	47μF,6.3V
C23	NCB21EK-104X	CAPACITOR	0.1μF,25V
C24	QCBB1HK-104	CAPACITOR	0.1μF,50V
C25	NDC21HJ-6R0X	CAPACITOR	6pF,50V
C26	NCB21EK-104X	CAPACITOR	0.1μF,25V
C27	NCB21HK-223X	CAPACITOR	0.022μF,50V
C28	QEKJ1HM-335	E CAPACITOR	3.3μF,50V
C29	NCB21EK-333X	CAPACITOR	0.033μF,25V
C30	NCB21CK-474X	CAPACITOR	0.47μF,16V
C31	QEKJ0JM-476	E CAPACITOR	47μF,6.3V
C32	QCBB1HK-104	CAPACITOR	0.1μF,50V
C33	QEKJ1HM-225	E CAPACITOR	2.2μF,50V
C34	NCB21EK-104X	CAPACITOR	0.1μF,25V
C35	NCB21HK-103X	CAPACITOR	0.01μF,50V
C36	QEKJ1HM-475	E CAPACITOR	4.7μF,50V
C37	QEKJ1HM-105	E CAPACITOR	1μF,50V
C38	QEKJ0JM-476	E CAPACITOR	47μF,6.3V
C39	NCB21EK-104X	CAPACITOR	0.1μF,25V
C40	QEKJ1EM-106	E CAPACITOR	10μF,25V
C45	QCBB1HK-104	CAPACITOR	0.1μF,50V
C46	NDC21HJ-101X	CAPACITOR	100pF,50V
C59	NCB21HK-103X	CAPACITOR	0.01μF,50V
C60	QEKJ0JM-476	E CAPACITOR	47μF,6.3V
C61	NCB21HK-103X	CAPACITOR	0.01μF,50V
C63	NCB21EK-104X	CAPACITOR	0.1μF,25V
C64	NDC21HJ-220X	CAPACITOR	22pF,50V
C65	QEKJ1HM-105	E CAPACITOR	1μF,50V
C69	NCB21EK-104X	CAPACITOR	0.1μF,25V
C70	NCB21EK-104X	CAPACITOR	0.1μF,25V
C71	NCB21HK-103X	CAPACITOR	0.01μF,50V
C72	NDC21HJ-470X	CAPACITOR	47pF,50V
C73	NDC21HJ-120X	CAPACITOR	12pF,50V
C80	NCB21HK-103X	CAPACITOR	0.01μF,50V
C106	NCB21HK-821X	CAPACITOR	820pF,50V
C108	NDC21HJ-680X	CAPACITOR	68pF,50V
C109	NCB21CK-224X	CAPACITOR	0.22μF,16V
C110	NDC21HJ-820X	CAPACITOR	82pF,50V
C114	NDC21HJ-181X	CAPACITOR	180pF,50V
C139	NDC21HJ-470X	CAPACITOR	47pF,50V
C143	QCFB1HZ-104	CAPACITOR	0.1μF,50V
C201	QEKJ0JM-227	E CAPACITOR	220μF,6.3V
C204	NCB21HK-103X	CAPACITOR	0.01μF,50V
C206	NDC21HJ-330X	CAPACITOR	33pF,50V
C207	NDC21HJ-330X	CAPACITOR	33pF,50V
C209	NCB21CK-474X	CAPACITOR	0.47μF,16V
C210	NDC21HJ-101X	CAPACITOR	100pF,50V
C211	NDC21HJ-101X	CAPACITOR	100pF,50V
C212	NCB21EK-104X	CAPACITOR	0.1μF,25V
C213	QERF1EM-475	E CAPACITOR	4.7μF,25V
C214	NCB21CK-224X	CAPACITOR	0.22μF,16V
C215	NCB21CK-224X	CAPACITOR	0.22μF,16V
C217	NDC21HJ-560X	CAPACITOR	56pF,50V
C218	QERF1HM-105	E CAPACITOR	1μF,50V
C222	NCB21CK-105X	CAPACITOR	1μF,16V

# ⚠ REF No.	PART No.	PART NAME, DESCRIPTION	
C225	QERF1AM-227	E CAPACITOR	220μF,10V
C2001	QEKJ1HM-475	E CAPACITOR	4.7μF,50V
C2002	QEKJ1EM-106	E CAPACITOR	10μF,25V
C2003	QEKJ0JM-476	E CAPACITOR	47μF,6.3V
C2005	QEKJ1HM-475	E CAPACITOR	4.7μF,50V
C2006	NCB21EK-123X	CAPACITOR	0.012μF,25V
C2007	QEKJ1CM-226	E CAPACITOR	22μF,16V
C2008	QEKJ1HM-475	E CAPACITOR	4.7μF,50V
C2009	NCB21HK-102X	CAPACITOR	0.001μF,50V
C2010	NCB21HK-152X	CAPACITOR	0.0015μF,50V
C2011	QEKJ1HM-475	E CAPACITOR	4.7μF,50V
C2012	QEKJ1HM-475	E CAPACITOR	4.7μF,50V
C2013	NDC21HJ-680X	CAPACITOR	68pF,50V
C2015	NCB21HK-682X	CAPACITOR	0.0068μF,50V
C2051	NCB21HK-331X	CAPACITOR	330pF,50V
C2052	QFLC1HJ-823Z	F CAPACITOR	0.082μF,50V
C2053	NCB21HK-472X	CAPACITOR	0.0047μF,50V
C2054	NCB21HK-223X	CAPACITOR	0.022μF,50V
C2055	QEKJ1EM-106	E CAPACITOR	10μF,25V
C2201	NCB21EK-104X	CAPACITOR	0.1μF,25V
C2202	NCB21EK-333X	CAPACITOR	0.033μF,25V
C2203	QEKJ1EM-106	E CAPACITOR	10μF,25V
C2204	QDGB1HK-102Y	CAPACITOR	0.001μF,50V
C2205	QEKJ1HM-105	E CAPACITOR	1μF,50V
C2206	QEKJ1EM-106	E CAPACITOR	10μF,25V
C2207	QEKJ1CM-476	E CAPACITOR	47μF,16V
C2208	QEKJ1HM-475	E CAPACITOR	4.7μF,50V
C2213	QEKJ1EM-106	E CAPACITOR	10μF,25V
C2214	QEKJ1EM-106	E CAPACITOR	10μF,25V
C2215	QEKJ1HM-475	E CAPACITOR	4.7μF,50V
C2216	QEKJ1HM-474	E CAPACITOR	0.47μF,50V
C2217	QEKJ1EM-106	E CAPACITOR	10μF,25V
C2218	QEKJ1HM-474	E CAPACITOR	0.47μF,50V
C2219	QEKJ1EM-106	E CAPACITOR	10μF,25V
C2220	QEKJ1HM-475	E CAPACITOR	4.7μF,50V
C2221	NCB21HK-103X	CAPACITOR	0.01μF,50V
C2222	QEKJ1HM-474	E CAPACITOR	0.47μF,50V
C2223	QEKJ1HM-474	E CAPACITOR	0.47μF,50V
C2224	NCB21HK-103X	CAPACITOR	0.01μF,50V
C2225	QEKJ1HM-475	E CAPACITOR	4.7μF,50V
C2226	QEKJ1EM-106	E CAPACITOR	10μF,25V
C2227	NCB21CK-104X	CAPACITOR	0.1μF,16V
C2228	NCB21CK-104X	CAPACITOR	0.1μF,16V
C2251	QEKJ0JM-476	E CAPACITOR	47μF,6.3V
C2252	NCB21HK-103X	CAPACITOR	0.01μF,50V
C2253	NCB21HK-103X	CAPACITOR	0.01μF,50V
C2254	NCB21HK-103X	CAPACITOR	0.01μF,50V
C2255	NDC21HJ-181X	CAPACITOR	180pF,50V
C3001	NCB21EK-104X	CAPACITOR	0.1μF,25V
C3003	QEKJ1EM-106	E CAPACITOR	10μF,25V
C3008	NCB21HK-102X	CAPACITOR	0.001μF,50V
C3011	QETL0JM-338	E CAPACITOR	3300μF,6.3V
C3012	QEKJ0JM-476	E CAPACITOR	47μF,6.3V
C3014	QEKJ0JM-476	E CAPACITOR	47μF,6.3V
C3015	NCB21EK-104X	CAPACITOR	0.1μF,25V
C3016	NCB21EK-104X	CAPACITOR	0.1μF,25V
C3020	NDC21HJ-101X	CAPACITOR	100pF,50V
C3021	NDC21HJ-101X	CAPACITOR	100pF,50V
C3022	NCB21EK-104X	CAPACITOR	0.1μF,25V
C3024	NDC21HJ-220X	CAPACITOR	22pF,50V
C3025	QAT3725-300Z	TRIM CAPACITOR,TIMER CLOCK	

#	⚠	REF No.	PART No.	PART NAME, DESCRIPTION	
		C3026	NCB21HK-103X	CAPACITOR	0.01μF,50V
		C3027	QEKJ1EM-106	E CAPACITOR	10μF,25V
		C3030	QEKJ0JM-476	E CAPACITOR	47μF,6.3V
		C3031	NCB21EK-104X	CAPACITOR	0.1μF,25V
		C3032	NCB21EK-104X	CAPACITOR	0.1μF,25V
		C3033	NCB21EK-104X	CAPACITOR	0.1μF,25V
		C3036	NDC21HJ-180X	CAPACITOR	18pF,50V
		C3037	NDC21HJ-120X	CAPACITOR	12pF,50V
		C3040	NCB21HK-103X	CAPACITOR	0.01μF,50V
		C3050	NCB21EK-104X	CAPACITOR	0.1μF,25V
		C4002	NCB21EK-104X	CAPACITOR	0.1μF,25V
		C4003	NCB21HK-102X	CAPACITOR	0.001μF,50V
		C4004	QEKJ1AM-226	E CAPACITOR	22μF,10V
		C4005	NCB21HK-222X	CAPACITOR	0.0022μF,50V
		C4006	QEKJ0JM-476	E CAPACITOR	47μF,6.3V
		C4007	NCB21HK-102X	CAPACITOR	0.001μF,50V
		C4008	NCB21AK-105X	CAPACITOR	1μF,10V
		C4009	NCB21HK-563X	CAPACITOR	0.056μF,50V
		C4010	NCB21EK-223X	CAPACITOR	0.022μF,25V
		C4011	NCB21EK-104X	CAPACITOR	0.1μF,25V
		C4012	NCB21AK-105X	CAPACITOR	1μF,10V
		C4013	NCB21HK-563X	CAPACITOR	0.056μF,50V
		C4014	NDC21HJ-101X	CAPACITOR	100pF,50V
		C4015	NCB21HK-102X	CAPACITOR	0.001μF,50V
	⚠	C5001	QFZ9073-683	F CAPACITOR	0.068μF,250V
	⚠	C5002	QFZ9051-333	F CAPACITOR	0.033μF,250V
	⚠	C5004	QCZ9071-222	CAPACITOR	0.0022μF,250V
		C5006	QEZ0375-686	E CAPACITOR	68μF,400V
		C5101	QCZ0212-472	CAPACITOR	0.0047μF,1kV
		C5102	QCZ0302-330Z	CAPACITOR	33pF,1kV
		C5104	QEKJ1HM-105	E CAPACITOR	1μF,50V
		C5105	QFN31HJ-183	F CAPACITOR	0.018μF,50V
		C5106	QCBB1HJ-271	CAPACITOR	270pF,50V
		C5107	QFV91HJ-104	F CAPACITOR	0.1μF,50V
		C5201	QEMU0JM-227	E CAPACITOR	220μF,6.3V
		C5202	QEMT1CM-687	E CAPACITOR	680μF,16V
		C5203	QEMT1AM-128	E CAPACITOR	1200μF,10V
		C5204	QETN2AM-475	E CAPACITOR	4.7μF,100V
		C5205	QETN1HM-106	E CAPACITOR	10μF,50V
		C5206	QETN1EM-476	E CAPACITOR	47μF,25V
		C5207	QETN1CM-107	E CAPACITOR	100μF,16V
		C5208	QEMU1EM-187	E CAPACITOR	180μF,25V
		C5301	QEKJ1CM-107	E CAPACITOR	100μF,16V
		C5302	QEKJ1CM-476	E CAPACITOR	47μF,16V
		C5303	QEKJ1CM-107	E CAPACITOR	100μF,16V
		C5304	QFLC1HJ-102Z	F CAPACITOR	0.001μF,50V
		C5305	QFV91HJ-224	F CAPACITOR	0.22μF,50V
		C5311	NCB21HK-103X	CAPACITOR	0.01μF,50V
		C5351	QUY153-050Y	IM BUS WIRE	
		C6007	QEMU0JM-227	E CAPACITOR	220μF,6.3V
		C6008	NCB21HK-103X	CAPACITOR	0.01μF,50V
		C6012	QEKJ1CM-107	E CAPACITOR	100μF,16V
		C6013	NCB21HK-103X	CAPACITOR	0.01μF,50V
		C6023	NRSA02J-0R0X	MG RESISTOR	0Ω,1/10W
		C6032	NCF21EZ-473X	CAPACITOR	0.047μF,25V
		C6037	QEKJ1EM-106	E CAPACITOR	10μF,25V
		C6052	NDC21HJ-101X	CAPACITOR	100pF,50V
		C6053	NDC21HJ-101X	CAPACITOR	100pF,50V
		C6501	QEKJ0JM-107	E CAPACITOR	100μF,6.3V
		C6502	NCB21HK-103X	CAPACITOR	0.01μF,50V
		C7001	QEKJ0JM-476	E CAPACITOR	47μF,6.3V

#	⚠	REF No.	PART No.	PART NAME, DESCRIPTION	
		C7003	QEKJ0JM-227	E CAPACITOR	220μF,6.3V
		C7005	NDC21HJ-470X	CAPACITOR	47pF,50V
		C7006	NDC21HJ-330X	CAPACITOR	33pF,50V
		C7007	QEKJ1HM-106	E CAPACITOR	10μF,50V
		C7008	NCB21HK-102X	CAPACITOR	0.001μF,50V
		C7011	QCFB1HZ-104	CAPACITOR	0.1μF,50V
		C7165	NCB21HK-681X	CAPACITOR	680pF,50V
		C7167	NCB21HK-681X	CAPACITOR	680pF,50V
		C7202	QETJ0JM-477	E CAPACITOR	470μF,6.3V
		L1	QQL29BJ-100Z	COIL	10μH
		L2	QQL071J-121Y	COIL	120μH
		L3	QQL29BJ-100Z	COIL	10μH
		L4	QQL29BJ-100Z	COIL	10μH
		L5	QQR0521-012Z	NOISE FILTER	
		L12	QQR0967-001	COIL	12μH
		L13	QQL071J-330Y	COIL	33μH
		L15	QQL29BJ-100Z	COIL	10μH
		L18	QQL071J-220Y	COIL	22μH
		L19	QQL071J-120Y	COIL	12μH
		L20	QUY153-050Y	IM BUS WIRE	
		L24	QQL071J-270Y	COIL	27μH
		L27	QQL071J-330Y	COIL	33μH
		L28	QQL071J-680Y	COIL	68μH
		L30	QUY153-050Y	IM BUS WIRE	
		L201	QQL29BK-1R0Z	COIL	1μH
		L202	QUY153-050Y	IM BUS WIRE	
		L203	QQL29BJ-220Z	COIL	22μH
		L204	QQL29BJ-100Z	COIL	10μH
		L206	QQL071J-220Y	COIL	22μH
		L2001	QUY153-050Y	IM BUS WIRE	
		L2251	QQL29BJ-100Z	COIL	10μH
		L2252	QQL29BJ-151Z	COIL	150μH
		L3001	QUY153-050Y	IM BUS WIRE	
		L3011	QUY153-050Y	IM BUS WIRE	
		L3012	QUY153-050Y	IM BUS WIRE	
		L4001	QUY153-050Y	IM BUS WIRE	
		L5201	PELN1184	COIL	33μH
		L5202	PU60944-330K	COIL	33μH
		L6001	QQL29BJ-100Z	COIL	10μH
		L6003	QQL29BJ-470Z	COIL	47μH
		L7201	QQL29BJ-100Z	COIL	10μH
		X1	QAX0576-001Z	CRYSTAL RESONATOR	
		X3001	QAX0445-001	CRYSTAL RESONATOR	
		X3002	QAX0527-001	CRYSTAL RESONATOR	
		S3001	QSW0602-004	PUSH SWITCH	
		S3002	QSW0695-001	PUSH SWITCH	
		S7001	QSW0456-002Z	TACT SWITCH	
		S7002	QSW0456-002Z	TACT SWITCH	
		S7004	QSW0456-002Z	TACT SWITCH	
		S7006	QSW0456-002Z	TACT SWITCH	
		S7008	QSW0456-002Z	TACT SWITCH	
		S7010	QSW0456-002Z	TACT SWITCH	
		S7012	QSW0456-002Z	TACT SWITCH	
		S7016	QSW0456-002Z	TACT SWITCH	
		K2001	NQR0403-003X	FERRITE BEAD	
		K2002	NQR0403-003X	FERRITE BEAD	
		K2003	NQR0403-003X	FERRITE BEAD	
		K2004	NRSA02J-0R0X	MG RESISTOR	0Ω,1/10W
		K2251	NRSA02J-0R0X	MG RESISTOR	0Ω,1/10W
		K2252	NRSA02J-0R0X	MG RESISTOR	0Ω,1/10W
		K2253	NRSA02J-0R0X	MG RESISTOR	0Ω,1/10W

#	⚠	REF No.	PART No.	PART NAME, DESCRIPTION	
		K5101	QQR0678-001Z	FERRITE BEAD	
		K5102	QUY153-050Y	IM BUS WIRE	
		K5301	QUY153-050Y	IM BUS WIRE	
		K6080	NRSA02J-102X	MG RESISTOR	1kΩ,1/10W
		PC3001	GP3S123	IC(PHOTO SENSOR	
		PC3002	GP3S123	IC(PHOTO SENSOR	
	⚠	PC5101	PS2561L1-1/L/	IC(PHOTO COUPLER)	
		T2051	PELN0832	OSC TRANSFORMER	
	⚠	T5001	QQS0033-001	SW TRANSFORMER	
		TU6001	QAU0208-002	TUNER	
		DI7001	QLF0031-001	FL TUBE	
		ET1	PQ21623-2-5	EARTH PLATE(RF)	
		HD1	PQ35479-1-4	HOLDER(FDP)	
		HS1	LP40621-001A	HEAT SINK,Q5101	
		OT1	QYTDSF3010Z	SCREW,X2	
		OT2	QYTDST3008Z	SCREW,Q5101	
		SD1	LP30864-001A	SHIELD CASE(PRE)	
		FC5001	QNG0006-001Z	FUSE CLIP	
		FC5002	QNG0006-001Z	FUSE CLIP	
		J7105	QNN0381-002	PIN JACK	
	⚠	LF5001	PELN1204-01-01	LINE FILTER	
	⚠	LF5002	QQR0978-001	LINE FILTER	
		CN1	QGF1028C1-11	FPC CONNECTOR,(1-11)U.DRUM	
		CN901	QGB2024K1-10S	CONNECTOR,(1-10)TERMINAL	
		CN902	QGB2024K1-12S	CONNECTOR,(1-12)TERMINAL	
		CN903	QGB2024K1-10S	CONNECTOR,(1-10)TERMINAL	
		CN904	QGB2024K1-11S	CONNECTOR,(1-11)TERMINAL	
		CN905	QGB2024K1-09S	CONNECTOR,(1-9)TERMINAL	
		CN2001	QGF1207C1-07	FPC CONNECTOR,(1-7)A/C HEAD	
		CN2002	QGB2532J1-02	CONNECTOR,(1-2)FE HEAD	
		CN3001	QGF1207C1-05	FPC CONNECTOR,(1-5)DRUM MDA	
		CN3002	QGB2532J1-02	CONNECTOR,(1-2)LOADING MOTOR	
		CN3003	QGB2015M2-08	CONNECTOR,(1-8)CAPSTAN MOTOR	
		CN3004	QGB2534J2-04	CONNECTOR,(1-4)ROTARY ENCODER	
	⚠	CN5001	QGA7901C3-02	CONNECTOR,(1-2)AC IN	
		CN7001	QGF1207C1-09	FPC CONNECTOR,(1-9)ADV.JOG	
	⚠	CP3002	ICP-N25	CIRCUIT PROTECTOR	
		CP4001	QUY153-050Y	IM BUS WIRE	
	⚠	CP5303	NMFZ012-1R5X-M	FUSE	T1.5A,50V
	⚠	CP5304	NMFZ012-1R0X-M	FUSE	T1.0A,50V
	⚠	F5001	QMF51E2-2R0J1	FUSE	T2.0A,AC250V

****

2D DIGITAL BOARD ASSEMBLY <05>

#	⚠	REF No.	PART No.	PART NAME, DESCRIPTION	
		PW1	LPA10090-07A	2D DIGITAL BOARD ASSY	
		IC1201	JCP8036	IC	
	⚠	Q1201	2SC1317/RS/-T	TRANSISTOR	
		Q1202	2SA1576A/QR/-X	TRANSISTOR	
			or 2PA1576/R/-X	TRANSISTOR	
		Q1203	2SA1576A/QR/-X	TRANSISTOR	
			or 2PA1576/R/-X	TRANSISTOR	
		Q1204	2SC4081/QRS/-X	TRANSISTOR	
			or 2PC4081/R/-X	TRANSISTOR	
		Q1205	2SC4081/S/-X	TRANSISTOR	
		Q1206	2SC4081/QRS/-X	TRANSISTOR	
			or 2PC4081/R/-X	TRANSISTOR	
		D1201	RD4.3ES/B3/-T2	ZENER DIODE	
		D1202	QUY153-050Y	IM BUS WIRE	
		R1201	NRSA02J-121X	MG RESISTOR	120Ω,1/10W
		R1202	NRSA02J-101X	MG RESISTOR	100Ω,1/10W
		R1203	NRSA02J-221X	MG RESISTOR	220Ω,1/10W
		R1204	NRSA02J-221X	MG RESISTOR	220Ω,1/10W
		R1205	NRSA02J-102X	MG RESISTOR	1kΩ,1/10W
		R1206	NRSA02J-561X	MG RESISTOR	560Ω,1/10W
		R1207	NRSA02J-562X	MG RESISTOR	5.6kΩ,1/10W
		R1208	NRSA02J-123X	MG RESISTOR	12kΩ,1/10W
		R1209	NRSA02J-180X	MG RESISTOR	18Ω,1/10W
		R1210	NRSA02J-393X	MG RESISTOR	39kΩ,1/10W
		R1211	NRSA02J-103X	MG RESISTOR	10kΩ,1/10W
		R1212	NRSA02J-102X	MG RESISTOR	1kΩ,1/10W
		R1213	NRSA02J-331X	MG RESISTOR	330Ω,1/10W
		R1214	NRSA02J-101X	MG RESISTOR	100Ω,1/10W
		R1215	NRSA02J-102X	MG RESISTOR	1kΩ,1/10W
		R1216	NRSA02J-331X	MG RESISTOR	330Ω,1/10W
		R1217	NRSA02J-101X	MG RESISTOR	100Ω,1/10W
		R1218	NRSA02J-301X	MG RESISTOR	300Ω,1/10W
		R1222	NRSA02J-471X	MG RESISTOR	470Ω,1/10W
		R1224	NRSA02J-561X	MG RESISTOR	560Ω,1/10W
		R1225	NRSA02J-273X	MG RESISTOR	27kΩ,1/10W
		R1226	NRSA02J-153X	MG RESISTOR	15kΩ,1/10W
		R1227	NRSA02J-561X	MG RESISTOR	560Ω,1/10W
		R1228	NRSA02J-391X	MG RESISTOR	390Ω,1/10W
		R1230	NRSA02J-0R0X	MG RESISTOR	0Ω,1/10W
		R1231	NRSA02J-0R0X	MG RESISTOR	0Ω,1/10W
		R1232	NRSA02J-0R0X	MG RESISTOR	0Ω,1/10W
		R1233	NRSA02J-0R0X	MG RESISTOR	0Ω,1/10W
		VR1201	QVZ3521-103Z	V RESISTOR,D/A LEVEL ADJ	
		B1204	NRSA02J-0R0X	MG RESISTOR	0Ω,1/10W
		C1201	QEKJ0JM-476	E CAPACITOR	47μF,6.3V
		C1208	NDC21HJ-101X	CAPACITOR	100pF,50V
		C1210	NDC21HJ-330X	CAPACITOR	33pF,50V
		C1211	QEKJ0JM-476	E CAPACITOR	47μF,6.3V
		C1212	NCB21HK-102X	CAPACITOR	0.001μF,50V
		C1213	NCF21EZ-104X	CAPACITOR	0.1μF,25V
		C1214	NCF21CZ-105X	CAPACITOR	1μF,16V
		C1215	QEKJ0JM-476	E CAPACITOR	47μF,6.3V
		C1216	NCF21EZ-104X	CAPACITOR	0.1μF,25V
		C1217	NCF21EZ-104X	CAPACITOR	0.1μF,25V
		C1218	NCF21EZ-104X	CAPACITOR	0.1μF,25V
		C1219	NCF21CZ-105X	CAPACITOR	1μF,16V
		C1220	QEKJ0JM-476	E CAPACITOR	47μF,6.3V
		C1222	NDC21HJ-820X	CAPACITOR	82pF,50V
		C1223	NDC21HJ-270X	CAPACITOR	27pF,50V
		C1225	NDC21HJ-820X	CAPACITOR	82pF,50V
		C1226	NDC21HJ-270X	CAPACITOR	27pF,50V
		C1227	NCB21EK-104X	CAPACITOR	0.1μF,25V
		C1228	QEKJ1HM-475	E CAPACITOR	4.7μF,50V
		C1229	NCB21HK-103X	CAPACITOR	0.01μF,50V
		C1230	NCF21EZ-104X	CAPACITOR	0.1μF,25V
		C1231	NCF21EZ-104X	CAPACITOR	0.1μF,25V
		C1232	NCF21EZ-104X	CAPACITOR	0.1μF,25V
		C1233	QDYB1CM-103Y	CAPACITOR	0.01μF,16V
		C1234	NCF21EZ-104X	CAPACITOR	0.1μF,25V
		C1235	QEKJ0JM-476	E CAPACITOR	47μF,6.3V
		C1236	NCF21EZ-104X	CAPACITOR	0.1μF,25V
		C1237	NCF21EZ-104X	CAPACITOR	0.1μF,25V
		C1238	NDC21HJ-180X	CAPACITOR	18pF,50V
		C1239	NDC21HJ-560X	CAPACITOR	56pF,50V

#	⚠	REF No.	PART No.	PART NAME, DESCRIPTION	
		C1243	NCB21HK-103X	CAPACITOR	0.01μF,50V
		C1244	QEKJ1HM-475	E CAPACITOR	4.7μF,50V
		C1245	NDC21HJ-150X	CAPACITOR	15pF,50V
		C1246	QEKJ0JM-476	E CAPACITOR	47μF,6.3V
		C1248	NCB21HK-103X	CAPACITOR	0.01μF,50V
		L1201	QQL071J-1R0Y	COIL	1μH
		L1202	QQL29BJ-101Z	COIL	100μH
		L1203	QQL29BJ-101Z	COIL	100μH
		L1204	QQL29BJ-101Z	COIL	100μH
		L1205	QQL071J-6R8Y	COIL	6.8μH
		L1206	QQL071J-6R8Y	COIL	6.8μH
		L1207	QQL29BJ-101Z	COIL	100μH
		L1208	QQL071J-150Y	COIL	15μH
		L1209	QUY153-050Y	IM BUS WIRE	
	⚠	LC1201	QQL29BJ-101Z	COIL	100μH
		SD1	LP30706-001C	SHIELD FRAME(S-VHS)	
		SD2	LP30684-001A	SHIELD CASE(S-VHS)	
		CN1201	QGG2502K1-17	HEADER PIN	

****

TERMINAL BOARD ASSEMBLY <06>

		PW1	LPA10138-01B	TERMINAL BOARD ASSY
		IC501	JCP8018	IC
			or JCP8028	IC
			or JCP8028-01	IC
			or JCP8038	IC
		IC502	VC2076DP	IC
		IC901	BH7636S	IC
		Q901	UN5211	TRANSISTOR
			or RN1302	TRANSISTOR
			or DTC114EU	TRANSISTOR
			or PDTC114EU	TRANSISTOR
		Q902	2SB1218A/QR/-X	TRANSISTOR
			or 2SA1576A/QR/-X	TRANSISTOR
			or 2PA1576/R/-X	TRANSISTOR
		Q905	UN521E	TRANSISTOR
			or PDTC144WU	TRANSISTOR
			or RN1309	TRANSISTOR
			or DTC144WU	TRANSISTOR
		Q906	2SD1819A/QRS/-X	TRANSISTOR
			or 2SC4081/QRS/-X	TRANSISTOR
			or 2PC4081/R/-X	TRANSISTOR
		Q907	2SD1819A/QRS/-X	TRANSISTOR
			or 2SC4081/QRS/-X	TRANSISTOR
			or 2PC4081/R/-X	TRANSISTOR
		Q908	2SD1819A/QRS/-X	TRANSISTOR
			or 2PC4081/R/-X	TRANSISTOR
			or 2SC4081/QRS/-X	TRANSISTOR
		Q909	2SB1218A/QR/-X	TRANSISTOR
			or 2SA1576A/QR/-X	TRANSISTOR
			or 2PA1576/R/-X	TRANSISTOR
		Q910	2SB1218A/QR/-X	TRANSISTOR
			or 2PA1576/R/-X	TRANSISTOR
			or 2SA1576A/QR/-X	TRANSISTOR
		Q911	UN521E	TRANSISTOR
			or PDTC144WU	TRANSISTOR
			or RN1309	TRANSISTOR
			or DTC144WU	TRANSISTOR
		Q912	UN5215	TRANSISTOR
			or PDTC114TU	TRANSISTOR
			or RN1311	TRANSISTOR
			or DTC114TU	TRANSISTOR
		R503	NRSA02J-221X	MG RESISTOR	220Ω,1/10W
		R504	NRSA02J-332X	MG RESISTOR	3.3kΩ,1/10W
		R505	NRSA02J-392X	MG RESISTOR	3.9kΩ,1/10W
		R506	NRSA02J-391X	MG RESISTOR	390Ω,1/10W
		R507	NRSA02J-122X	MG RESISTOR	1.2kΩ,1/10W
		R508	NRSA02J-151X	MG RESISTOR	150Ω,1/10W
		R509	NRSA02J-162X	MG RESISTOR	1.6kΩ,1/10W
		R510	NRVA02D-102X	CMF RESISTOR	1kΩ,1/10W
		R511	NRVA02D-471X	CMF RESISTOR	470Ω,1/10W
		R512	NRVA02D-102X	CMF RESISTOR	1kΩ,1/10W
		R513	NRVA02D-152X	CMF RESISTOR	1.5kΩ,1/10W
		R514	NRVA02D-332X	CMF RESISTOR	3.3kΩ,1/10W
		R515	NRVA02D-332X	CMF RESISTOR	3.3kΩ,1/10W
		R516	QUY160-100Y	IM BUS WIRE	
		R517	QUY160-100Y	IM BUS WIRE	
		R525	QRE141J-125Y	RESISTOR	1.2MΩ,1/4W
		R527	NRSA02J-332X	MG RESISTOR	3.3kΩ,1/10W
		R531	NRSA02J-101X	MG RESISTOR	100Ω,1/10W
		R532	NRSA02J-101X	MG RESISTOR	100Ω,1/10W
		R533	NRSA02J-101X	MG RESISTOR	100Ω,1/10W
		R534	NRSA02J-101X	MG RESISTOR	100Ω,1/10W
		R535	NRSA02J-101X	MG RESISTOR	100Ω,1/10W
		R536	NRSA02J-101X	MG RESISTOR	100Ω,1/10W
		R901	NRSA02J-750X	MG RESISTOR	75Ω,1/10W
		R902	NRSA02J-750X	MG RESISTOR	75Ω,1/10W
		R903	QRE141J-680Y	RESISTOR	68Ω,1/4W
		R904	NQL402M-4R7X	MG RESISTOR	
		R905	NQL402M-4R7X	MG RESISTOR	
		R906	QQL231J-100Y	COIL	10μH
		R907	QQL231J-100Y	COIL	10μH
		R908	NRSA02J-0R0X	MG RESISTOR	0Ω,1/10W
		R909	NRSA02J-750X	MG RESISTOR	75Ω,1/10W
		R910	NRSA02J-750X	MG RESISTOR	75Ω,1/10W
		R911	NRSA02J-750X	MG RESISTOR	75Ω,1/10W
		R912	NRSA02J-101X	MG RESISTOR	100Ω,1/10W
		R913	NRSA02J-101X	MG RESISTOR	100Ω,1/10W
		R914	QQL231J-100Y	COIL	10μH
		R915	QQL231J-100Y	COIL	10μH
		R916	NRSA02J-102X	MG RESISTOR	1kΩ,1/10W
		R917	NRSA02J-0R0X	MG RESISTOR	0Ω,1/10W
		R918	NRSA02J-0R0X	MG RESISTOR	0Ω,1/10W
		R929	NRSA02J-820X	MG RESISTOR	82Ω,1/10W
		R930	NRSA02J-750X	MG RESISTOR	75Ω,1/10W
		R931	NRSA02J-101X	MG RESISTOR	100Ω,1/10W
		R932	NRSA02J-511X	MG RESISTOR	510Ω,1/10W
		R933	NRSA02J-471X	MG RESISTOR	470Ω,1/10W
		R934	QRE141J-101Y	RESISTOR	100Ω,1/4W
		R935	QRE141J-101Y	RESISTOR	100Ω,1/4W
		R936	QRE141J-101Y	RESISTOR	100Ω,1/4W
		R937	QRE141J-101Y	RESISTOR	100Ω,1/4W
		R938	QRE141J-101Y	RESISTOR	100Ω,1/4W
		R939	QRE141J-101Y	RESISTOR	100Ω,1/4W
		R940	NRSA02J-103X	MG RESISTOR	10kΩ,1/10W
		R941	NRSA02J-332X	MG RESISTOR	3.3kΩ,1/10W
		R942	NRSA02J-472X	MG RESISTOR	4.7kΩ,1/10W
		R943	NRSA02J-0R0X	MG RESISTOR	0Ω,1/10W

#	⚠	REF No.	PART No.	PART NAME, DESCRIPTION	
		R944	NRSA02J-272X	MG RESISTOR	2.7kΩ,1/10W
		R945	NRSA02J-102X	MG RESISTOR	1kΩ,1/10W
		R946	NRSA02J-561X	MG RESISTOR	560Ω,1/10W
		R947	NRSA02J-682X	MG RESISTOR	6.8kΩ,1/10W
		R949	QRE121J-331Y	RESISTOR	330Ω,1/2W
		R951	NRSA02J-332X	MG RESISTOR	3.3kΩ,1/10W
		R952	NRSA02J-562X	MG RESISTOR	5.6kΩ,1/10W
		R953	NRSA02J-562X	MG RESISTOR	5.6kΩ,1/10W
		R964	NRSA02J-101X	MG RESISTOR	100Ω,1/10W
		C501	QEKJ1HM-225	E CAPACITOR	2.2μF,50V
		C502	QEKJ1HM-475	E CAPACITOR	4.7μF,50V
		C503	QEKJ1HM-225	E CAPACITOR	2.2μF,50V
		C504	NCB21EK-104X	CAPACITOR	0.1μF,25V
		C505	QEKJ1HM-475	E CAPACITOR	4.7μF,50V
		C506	NCB21HK-103X	CAPACITOR	0.01μF,50V
		C507	QEKJ0JM-476	E CAPACITOR	47μF,6.3V
		C508	QEKJ1HM-474	E CAPACITOR	0.47μF,50V
		C509	QEKJ1CM-106	E CAPACITOR	10μF,16V
		C510	QEKJ0JM-476	E CAPACITOR	47μF,6.3V
		C511	NCB21HK-103X	CAPACITOR	0.01μF,50V
		C512	NCB21HK-103X	CAPACITOR	0.01μF,50V
		C513	QEKJ1HM-475	E CAPACITOR	4.7μF,50V
		C514	NCB21HK-103X	CAPACITOR	0.01μF,50V
		C515	NCB21HK-103X	CAPACITOR	0.01μF,50V
		C516	NCB21HK-103X	CAPACITOR	0.01μF,50V
		C518	NCB21EK-104X	CAPACITOR	0.1μF,25V
		C519	QEKJ1HM-225	E CAPACITOR	2.2μF,50V
		C520	QEKJ1HM-475	E CAPACITOR	4.7μF,50V
		C521	QEKJ1HM-475	E CAPACITOR	4.7μF,50V
		C522	QEKJ1HM-225	E CAPACITOR	2.2μF,50V
		C523	QEKJ1HM-225	E CAPACITOR	2.2μF,50V
		C524	NDC21HG-301X	CAPACITOR	300pF,50V
		C525	NDC21HG-301X	CAPACITOR	300pF,50V
		C526	NDC21HJ-101X	CAPACITOR	100pF,50V
		C527	NDC21HJ-181X	CAPACITOR	180pF,50V
		C528	NDC21HG-271X	CAPACITOR	270pF,50V
		C529	NDC21HG-820X	CAPACITOR	82pF,50V
		C530	NDC21HG-221X	CAPACITOR	220pF,50V
		C531	NDC21HG-301X	CAPACITOR	300pF,50V
		C532	NDC21HG-301X	CAPACITOR	300pF,50V
		C533	NCB21HK-103X	CAPACITOR	0.01μF,50V
		C534	QEKJ0JM-476	E CAPACITOR	47μF,6.3V
		C535	NCB21HK-103X	CAPACITOR	0.01μF,50V
		C551	QEKJ1HM-105	E CAPACITOR	1μF,50V
		C553	QCBB1HK-103	CAPACITOR	0.01μF,50V
		C554	QEKJ1HM-105	E CAPACITOR	1μF,50V
		C556	QCBB1HK-103	CAPACITOR	0.01μF,50V
		C557	QEKJ1HM-105	E CAPACITOR	1μF,50V
		C559	NCB21HK-103X	CAPACITOR	0.01μF,50V
		C560	QEKJ1HM-105	E CAPACITOR	1μF,50V
		C561	QEKJ1HM-105	E CAPACITOR	1μF,50V
		C563	NCB21HK-103X	CAPACITOR	0.01μF,50V
		C568	NDC21HJ-680X	CAPACITOR	68pF,50V
		C569	NDC21HJ-680X	CAPACITOR	68pF,50V
		C570	NDC21HJ-680X	CAPACITOR	68pF,50V
		C571	NDC21HJ-680X	CAPACITOR	68pF,50V
		C572	NDC21HJ-680X	CAPACITOR	68pF,50V
		C573	NDC21HJ-680X	CAPACITOR	68pF,50V
		C575	NDC21HJ-101X	CAPACITOR	100pF,50V
		C901	NCB21HK-331X	CAPACITOR	330pF,50V
		C902	NCB21HK-331X	CAPACITOR	330pF,50V

#	⚠	REF No.	PART No.	PART NAME, DESCRIPTION	
		C903	NCB21HK-471X	CAPACITOR	470pF,50V
		C904	NCB21HK-471X	CAPACITOR	470pF,50V
		C905	NCB21HK-331X	CAPACITOR	330pF,50V
		C906	NCB21HK-331X	CAPACITOR	330pF,50V
		C907	NCB21HK-471X	CAPACITOR	470pF,50V
		C908	NCB21HK-471X	CAPACITOR	470pF,50V
		C910	NCB21HK-102X	CAPACITOR	0.001μF,50V
		C912	NCB21HK-102X	CAPACITOR	0.001μF,50V
		C915	NCB21HK-103X	CAPACITOR	0.01μF,50V
		C916	NCB21HK-223X	CAPACITOR	0.022μF,50V
		C917	NCB21HK-223X	CAPACITOR	0.022μF,50V
		C918	QCBB1HK-223	CAPACITOR	0.022μF,50V
		C921	NDC21HJ-330X	CAPACITOR	33pF,50V
		C923	QEKJ1CM-476	E CAPACITOR	47μF,16V
		C924	NCB21HK-103X	CAPACITOR	0.01μF,50V
		C925	NCB21HK-223X	CAPACITOR	0.022μF,50V
		C927	QEKJ1CM-476	E CAPACITOR	47μF,16V
		C928	NCB21HK-103X	CAPACITOR	0.01μF,50V
		C931	QEKJ1EM-106	E CAPACITOR	10μF,25V
		C935	NCB21HK-471X	CAPACITOR	470pF,50V
		C936	NCB21HK-471X	CAPACITOR	470pF,50V
		C937	NCB21HK-331X	CAPACITOR	330pF,50V
		C938	NCB21HK-331X	CAPACITOR	330pF,50V
		C939	NCB21HK-471X	CAPACITOR	470pF,50V
		C940	NCB21HK-471X	CAPACITOR	470pF,50V
		C943	QEKJ1CM-107	E CAPACITOR	100μF,16V
		C945	QEKJ1EM-106	E CAPACITOR	10μF,25V
		C946	QEKJ1EM-106	E CAPACITOR	10μF,25V
		C951	QEKC1CM-476	E CAPACITOR	47μF,16V
		C958	NCB21HK-331X	CAPACITOR	330pF,50V
		C959	NCB21HK-331X	CAPACITOR	330pF,50V
		L501	QQL29BJ-100Z	COIL	10μH
		L503	QQL29BJ-100Z	COIL	10μH
		L504	QQL29BJ-100Z	COIL	10μH
		L505	QUY153-050Y	IM BUS WIRE	
		L901	QQL231J-R22Y	COIL	0.22μH
		L902	QQL071J-1R0Y	COIL	1μH
		L903	QQL071J-150Y	COIL	15μH
		L904	QQL071J-150Y	COIL	15μH
		L907	QUY153-050Y	IM BUS WIRE	
		L910	QQL071J-1R0Y	COIL	1μH
		L913	QQL071J-4R7Y	COIL	4.7μH
		L914	QQL071J-4R7Y	COIL	4.7μH
		L915	QQL071J-4R7Y	COIL	4.7μH
		L916	QQL071J-4R7Y	COIL	4.7μH
		L917	QQL071J-4R7Y	COIL	4.7μH
		L918	QQL071J-4R7Y	COIL	4.7μH
		L919	QQL071J-4R7Y	COIL	4.7μH
		L920	QQL071J-4R7Y	COIL	4.7μH
		ET1	LP30918-001A	EARTH PLATE	
		ET2	LP30915-001A	EARTH PLATE	
	⚠	TB1	LP21028-001A	TERMINAL BOARD	
		J901	PEMC1177	RGB21PIN SOCKET,AV1	
		J902	PEMC1177	RGB21PIN SOCKET,AV2	
		J915	QNN0418-003	PIN JACK,A.OUT(L)	
		J916	QNN0418-002	PIN JACK,A.OUT(R)	
		J921	PU60659	MINI JACK,SAT.CTL	
		OT1	QYTDSF3008Z	SCREW,X6	
		CN911	QGB2024J1-10S	CONNECTOR,(1-10)MAIN	
		CN912	QGB2024J1-12S	CONNECTOR,(1-12)MAIN	
		CN913	QGB2024J1-10S	CONNECTOR,(1-10)MAIN	

# ⚠ REF No.	PART No.	PART NAME, DESCRIPTION
CN914	QGB2024J1-11S	CONNECTOR,(1-11)MAIN
CN915	QGB2024J1-09S	CONNECTOR,(1-9)MAIN
CN916	QGF1208F1-04	FPC CONNECTOR,(1-4)S JACK

****

A/C HEAD BOARD ASSEMBLY <12>

PW1	LP10122-01A1	A/C HEAD BOARD ASSY
CN1	QGF1208F1-07	FPC CONNECTOR

****

DEMOD BOARD ASSEMBLY <14>

PW1	LPA10060-04A	DEMOD BOARD ASSY	
IC6701	TDA9874AH/V2	IC	
Q6701	2SC3936/BC/-X	TRANSISTOR	
R6701	NRSA02J-102X	MG RESISTOR	1kΩ,1/10W
R6703	NRSA02J-102X	MG RESISTOR	1kΩ,1/10W
R6705	NRSA02J-100X	MG RESISTOR	10Ω,1/10W
R6706	NRSA02J-0R0X	MG RESISTOR	0Ω,1/10W
R6708	NRSA02J-0R0X	MG RESISTOR	0Ω,1/10W
R6711	NRSA02J-822X	MG RESISTOR	8.2kΩ,1/10W
R6715	NRSA02J-100X	MG RESISTOR	10Ω,1/10W
R6716	NRSA02J-101X	MG RESISTOR	100Ω,1/10W
R6717	NRSA02J-101X	MG RESISTOR	100Ω,1/10W
R6719	NRSA02J-3R3X	MG RESISTOR	3.3Ω,1/10W
R6721	NRSA02J-392X	MG RESISTOR	3.9kΩ,1/10W
R6722	NRSA02J-472X	MG RESISTOR	4.7kΩ,1/10W
R6723	NRSA02J-470X	MG RESISTOR	47Ω,1/10W
R6724	NRSA02J-221X	MG RESISTOR	220Ω,1/10W
R6725	NRSA02J-101X	MG RESISTOR	100Ω,1/10W
R6726	NRSA02J-102X	MG RESISTOR	1kΩ,1/10W
B6702	NRSA02J-0R0X	MG RESISTOR	0Ω,1/10W
C6701	QEKJ1HM-225	E CAPACITOR	2.2μF,50V
C6702	NCB21HK-682X	CAPACITOR	0.0068μF,50V
C6703	QEKJ1HM-225	E CAPACITOR	2.2μF,50V
C6704	NCB21HK-682X	CAPACITOR	0.0068μF,50V
C6705	NCF21CZ-474X	CAPACITOR	0.47μF,16V
C6706	NCF21CZ-474X	CAPACITOR	0.47μF,16V
C6713	NRSA02J-0R0X	MG RESISTOR	0Ω,1/10W
C6716	NCF21CZ-474X	CAPACITOR	0.47μF,16V
C6718	NCB21EK-224X	CAPACITOR	0.22μF,25V
C6719	NCB21HK-103X	CAPACITOR	0.01μF,50V
C6720	QEKJ1HM-105	E CAPACITOR	1μF,50V
C6722	NCF21CZ-474X	CAPACITOR	0.47μF,16V
C6723	NDC21HJ-101X	CAPACITOR	100pF,50V
C6724	NDC21HJ-101X	CAPACITOR	100pF,50V
C6728	NCB21HK-103X	CAPACITOR	0.01μF,50V
C6729	QEKJ1HM-225	E CAPACITOR	2.2μF,50V
C6730	QEKJ1CM-476	E CAPACITOR	47μF,16V
C6731	NRSA02J-0R0X	MG RESISTOR	0Ω,1/10W
C6732	NCB21HK-103X	CAPACITOR	0.01μF,50V
C6733	NCB21HK-222X	CAPACITOR	0.0022μF,50V
C6734	NCB21HK-103X	CAPACITOR	0.01μF,50V
L6702	QQL231J-1R0Y	COIL	1μH
L6703	QQL231J-3R3Y	COIL	3.3μH
X6701	QAX0560-001	CRYSTAL RESONATOR	
K6701	NQR0200-003X	FERRITE BEAD	
K6703	NQR0200-003X	FERRITE BEAD	
K6704	NQR0200-003X	FERRITE BEAD	
K6705	NQR0200-003X	FERRITE BEAD	
K6706	NQR0200-003X	FERRITE BEAD	
K6707	NQR0200-003X	FERRITE BEAD	
BK1	LP40425-001A	BRACKET(BOARD)	
CN6701	QGG2502K1-10	HEADER PIN	

****

S.JACK BOARD ASSEMBLY <36>

PW1	LPA20009-02B	S JACK BORD ASSY
J7102	QND0084-001	S JACK
CN7108	QGF1209F1-04	FPC CONNECTOR,(1-4)MAIN

****

ADV.JOG BOARD ASSEMBLY <38>

PW1	LPA20013-03B	ADV.JOG BOARD ASSY
UN7001	QSW0905-001	ROTARY ENCODER
CN7003	QGF1209F1-09	FPC CONNECTOR,(1-9)MAIN

****

LOADING MOTOR BOARD ASSEMBLY <55>

PW2	LP10122-01A2	LOADING MOTOR BOARD ASSY
CN1	QGB2533K1-02	CONNECTOR